LAVADORAS DE CENTRIFUGADO ALTO
HIGH SPIN WASHER-EXTRACTORS

MODELOS / MODELS

LA-11 TP2

LA-14 TP2

LA-18 TP2

LA-25 TP2

LA-35 TP2

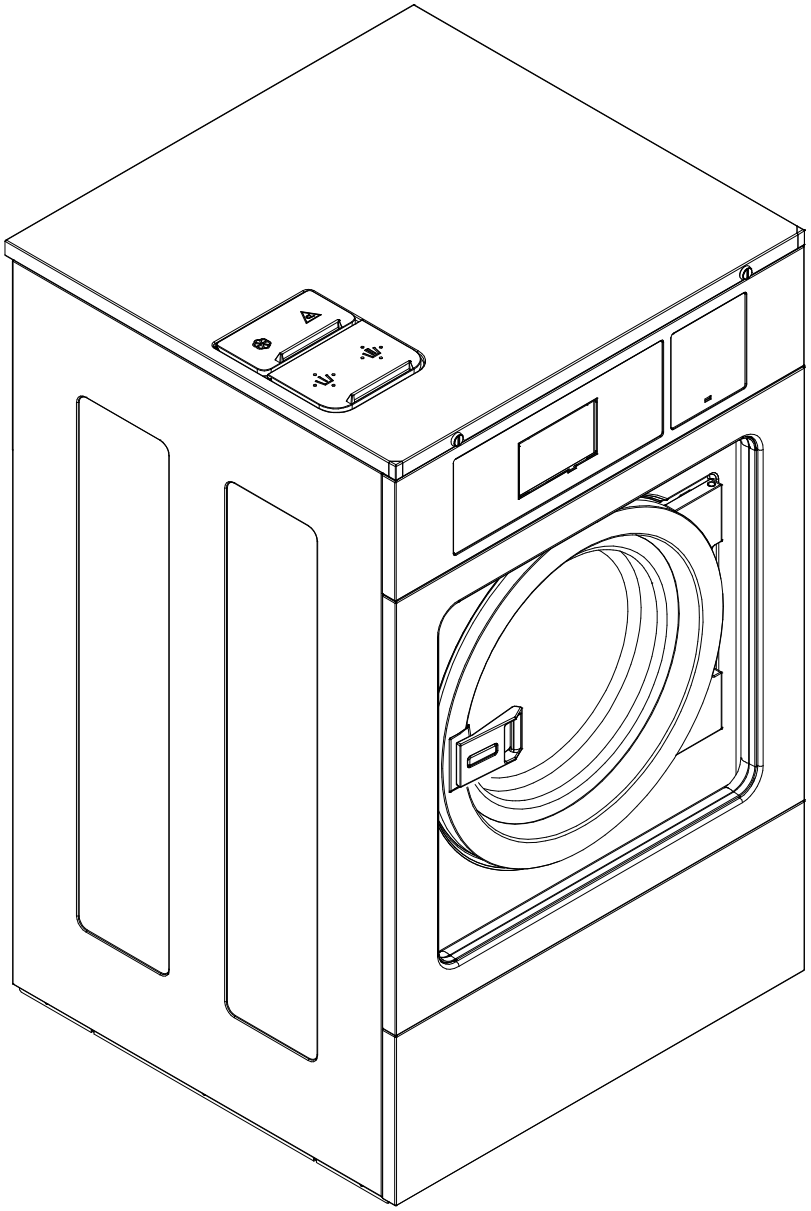

ENERO 2019 JANUARY

FAGOR

FAGOR INDUSTRIAL

Despiece técnico LA_11-35 TP2 / Spare Parts LA_11-35 TP2

CONTENIDO / CONTENTS

MUEBLE / UNIT.	1-4
ARMAZÓN / FRAME.	5-6
CUBA / TANK.	7-11
CONJUNTO HIDRÁULICO / HYDRAULIC ASSEMBLY.	12-14
CUADRO ELÉCTRICO (LA_11-14-18) / ELECTRIC BOARD (LA_11-14-18).	15-16
CUADRO ELÉCTRICO (LA_25-35) / ELECTRIC BOARD (LA_25-35).	17-18
*KIT MONEDERO / SLOT COIN KIT.	19-20
*KIT RODAMIENTOS / BEARING KIT.	21
VARIOS / MISCELLANEOUS.	22
REPUESTOS RECOMENDADOS / RECOMMENDED SPARE PARTS.	23-24
ESQUEMAS ELÉCTRICOS / WIRING DIAGRAMS.	25

* KITS NO INCLUIDOS EN TODOS LOS MODELOS / KITS NOT INCLUDED IN ALL MODELS

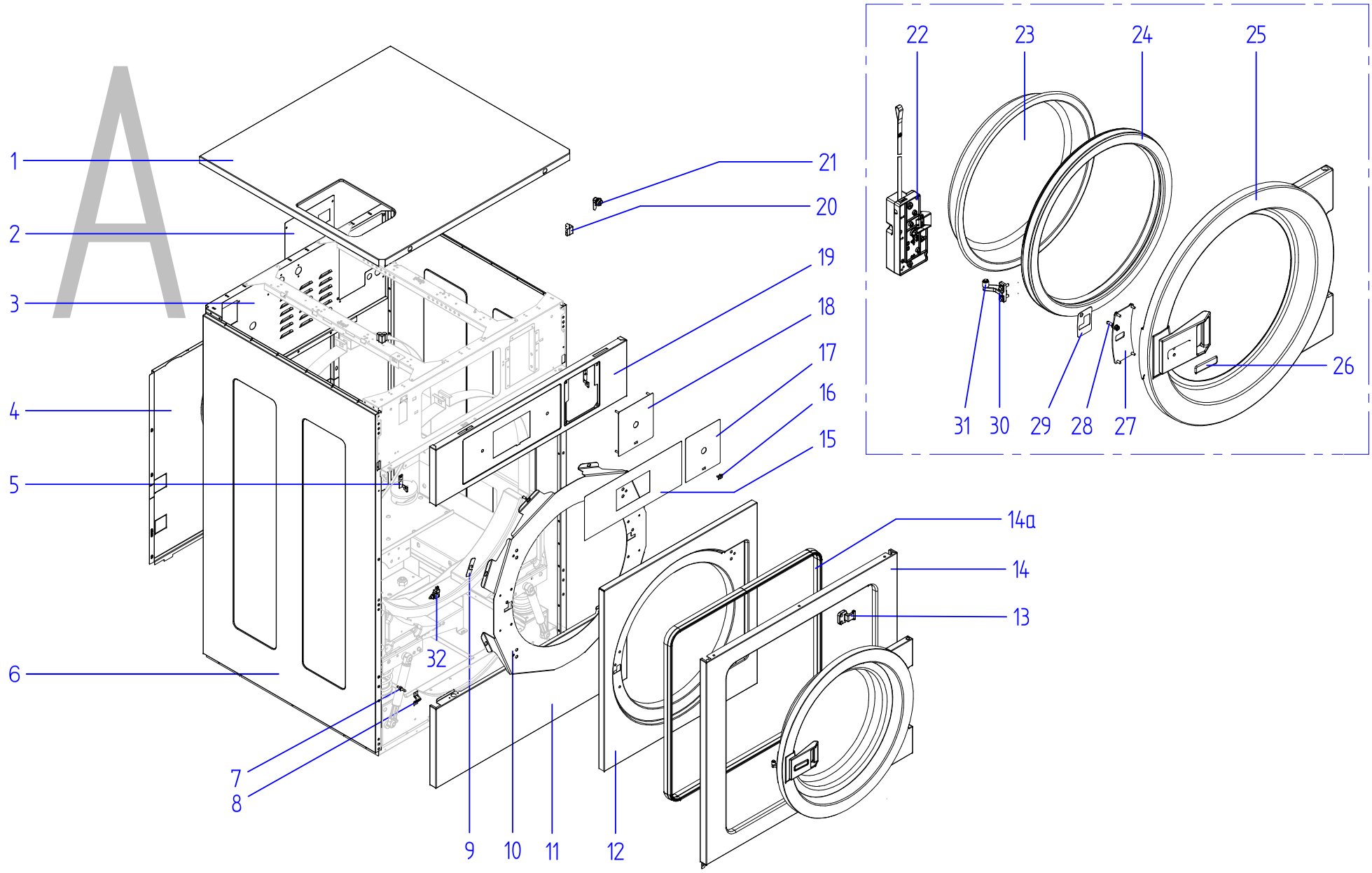

LA-11-35 TP2		
01-2019	MUEBLE / UNIT	1

FAGOR

FAGOR INDUSTRIAL

APARATO / APPLIANCE	LAVADORA / WASHER-EXTRACTOR	ZONA / ZONE	A (MUEBLE / UNIT)

ITEM	REFERENCIA REFERENCE	DENOMINACIÓN	DENOMINATION	LA-11 TP2	LA-14 TP2	LA-18 TP2	LA-25 TP2	LA-35 TP2			RECOMENDADOS RECOMMENDED	ELIMINADO ELIMINATED	INTRODUCIDO INTRODUCED	NOTAS / NOTES
1	12216015	ENCIMERA SKINPLATE	SKINPLATE WORKTOP	1	-	-	-	-						
1	12216009	ENCIMERA SKINPLATE	SKINPLATE WORKTOP	-	1	-	-	-						
1	12216078	ENCIMERA SKINPLATE	SKINPLATE WORKTOP	-	-	1	-	-						
1	12215859	ENCIMERA SKINPLATE	SKINPLATE WORKTOP	-	-	-	1	-						
1	12215890	ENCIMERA SKINPLATE	SKINPLATE WORKTOP	-	-	-	-	1						
1a	11003060	PERFIL GOMA APOYO CUBETA	TRAY SUPPORT RUBBER PROFILE	0,93m	0,93m	0,93m	0,93m	0,93m						
1	12120624	ENCIMERA INOX	INOX WORKTOP	1	-	-	-	-						
1	12114394	ENCIMERA INOX	INOX WORKTOP	-	1	-	-	-						
1	12121305	ENCIMERA INOX	INOX WORKTOP	-	-	1	-	-						
1	12125412	ENCIMERA INOX	INOX WORKTOP	-	-	-	1	-						
1	12111682	ENCIMERA INOX	INOX WORKTOP	-	-	-	-	1						
2	12119916	TAPA CUADRO ELÉCTRICO	ELECTRIC BOARD COVER	1	-	-	-	-						
2	12119402	TAPA CUADRO ELÉCTRICO	ELECTRIC BOARD COVER	-	1	1	1	1						
3	12161465	SOPORTE ELECTROVÁLVULAS	SOLENOID VALVE SUPPORT	1	-	-	-	-						
3	12165413	SOPORTE ELECTROVÁLVULAS	SOLENOID VALVE SUPPORT	-	1	-	-	-						
3	12165417	SOPORTE ELECTROVÁLVULAS	SOLENOID VALVE SUPPORT	-	-	1	-	-						
3	12165440	SOPORTE ELECTROVÁLVULAS	SOLENOID VALVE SUPPORT	-	-	-	1	-						
3	12165474	SOPORTE ELECTROVÁLVULAS	SOLENOID VALVE SUPPORT	-	-	-	-	1						
4	12160509	PANEL POSTERIOR	REAR PANEL	1	-	-	-	-						
4	12001239	PANEL POSTERIOR	REAR PANEL	-	1	-	-	-						
4	12001211	PANEL POSTERIOR	REAR PANEL	-	-	1	-	-						
4	12001154	PANEL POSTERIOR	REAR PANEL	-	-	-	1	-						
4	12111421	PANEL POSTERIOR	REAR PANEL	-	-	-	-	1						
5	12227401	BISAGRA PORTAMANDOS IZQ	CONTROL PANEL LEFT HINGE	1	1	1	1	1						
5	12227404	BISAGRA PORTAMANDOS DCH	CONTROL PANEL RICHT HINGE	1	1	1	1	1						
6	12160466	PANEL LATERAL SKINPLATE	SKINPLATE SIDE PANEL	2	-	-	-	-						
6	12168536	PANEL LATERAL SKINPLATE	SKINPLATE SIDE PANEL	-	2	-	-	-						
6	12168475	PANEL LATERAL SKINPLATE	SKINPLATE SIDE PANEL	-	-	2	-	-						
6	12168535	PANEL LATERAL SKINPLATE	SKINPLATE SIDE PANEL	-	-	-	2	-						
6	12184690	PANEL LATERAL SKINPLATE	SKINPLATE SIDE PANEL	-	-	-	-	2						
6	12173747	PANEL LATERAL INOX	INOX SIDE PANEL	2	-	-	-	-						
6	12170054	PANEL LATERAL INOX	INOX SIDE PANEL	-	2	-	-	-						
6	12172067	PANEL LATERAL INOX	INOX SIDE PANEL	-	-	2	-	-						
6	12172083	PANEL LATERAL INOX	INOX SIDE PANEL	-	-	-	2	-						
6	12184915	PANEL LATERAL INOX	INOX SIDE PANEL	-	-	-	-	2						
7	12008693	PITÓN CIERRE	LOCK BOLT	7	7	7	13	13						
8	12008460	MUELLE CIERRE	LOCK SPRING	7	7	7	13	13						
9	12120183	SEPARADOR CALZO PUERTA	DOOR PROP SPACER	12	12	12	12	8						
9	12119926	SEPARADOR CALZO PUERTA	DOOR PROP SPACER	-	-	-	-	6						

FAGOR
FAGOR INDUSTRIAL

APARATO / APPLIANCE	LAVADORA / WASHER-EXTRACTOR	ZONA / ZONE	A (MUEBLE / UNIT)

ITEM	REFERENCIA REFERENCE	DENOMINACIÓN	DENOMINATION	LA-11 TP2	LA-14 TP2	LA-18 TP2	LA-25 TP2	LA-35 TP2			RECOMENDADOS RECOMMENDED	ELIMINADO ELIMINATED	INTRODUCIDO INTRODUCED	NOTAS / NOTES
10	12121028	REP CALZO PUERTA	DOOR PROP	1	-	-	-	-						
10	12121036	REP CALZO PUERTA	DOOR PROP	-	1	-	-	-						
10	12121490	REP CALZO PUERTA	DOOR PROP	-	-	1	1	-						
10	12128227	REP CALZO PUERTA	DOOR PROP	-	-	-	-	1						
11	12160240	ZOCALO SKINPLATE	SKINPLATE SKIRTING	1	-	-	-	-						
11	12168607	ZOCALO SKINPLATE	SKINPLATE SKIRTING	-	1	-	-	-						
11	12167914	ZOCALO SKINPLATE	SKINPLATE SKIRTING	-	-	1	-	-						
11	12168764	ZOCALO SKINPLATE	SKINPLATE SKIRTING	-	-	-	1	-						
11	12184661	ZOCALO SKINPLATE	SKINPLATE SKIRTING	-	-	-	-	1						
11	12173748	ZOCALO INOX	INOX SKIRTING	1	-	-	-	-						
11	12160777	ZOCALO INOX	INOX SKIRTING	-	1	-	-	-						
11	12152614	ZOCALO INOX	INOX SKIRTING	-	-	1	-	-						
11	12188648	ZOCALO INOX	INOX SKIRTING	-	-	-	1	-						
11	12184916	ZOCALO INOX	INOX SKIRTING	-	-	-	-	1						
12	12160182	FONDO PUERTA SKINPLATE	SKINPLATE DOOR BASE	1	-	-	-	-						
12	12171100	FONDO PUERTA SKINPLATE	SKINPLATE DOOR BASE	-	1	-	-	-						
12	12166575	FONDO PUERTA SKINPLATE	SKINPLATE DOOR BASE	-	-	1	1	-						
12	12185099	FONDO PUERTA SKINPLATE	SKINPLATE DOOR BASE	-	-	-	-	1						
12	12173744	FONDO PUERTA INOX	INOX DOOR BASE	1	-	-	-	-						
12	12171311	FONDO PUERTA INOX	INOX DOOR BASE	-	1	-	-	-						
12	12140943	FONDO PUERTA INOX	INOX DOOR BASE	-	-	1	1	-						
12	12184956	FONDO PUERTA INOX	INOX DOOR BASE	-	-	-	-	1						
13	12227476	BISAGRA PUERTA	DOOR HINGE	2	2	2	2	-						
13	12227479	BISAGRA PUERTA	DOOR HINGE	-	-	-	-	2						
14	12159436	MARCO FRONTAL SKINPLATE	SKINPLATE FRONT FRAME	1	-	-	-	-						
14	12171218	MARCO FRONTAL SKINPLATE	SKINPLATEFRONT FRAME	-	1	-	-	-						
14	12166760	MARCO FRONTAL SKINPLATE	SKINPLATEFRONT FRAME	-	-	1	-	-						
14	12167212	MARCO FRONTAL SKINPLATE	SKINPLATEFRONT FRAME	-	-	-	1	-						
14	12184648	MARCO FRONTAL SKINPLATE	SKINPLATEFRONT FRAME	-	-	-	-	1						
14	12173746	MARCO FRONTAL INOX	INOX FRONT FRAME	1	-	-	-	-						
14	12171315	MARCO FRONTAL INOX	INOX FRAME	-	1	-	-	-						
14	12140990	MARCO FRONTAL INOX	INOX FRAME	-	-	1	-	-						
14	12152050	MARCO FRONTAL INOX	INOX FRAME	-	-	-	1	-						
14	12216922	MARCO FRONTAL INOX	INOX FRAME	-	-	-	-	1						
14a	11000161	PERFIL EMBELLECEDOR A1 104/2	A1 104/2 PROFILE	2m	2,5m	2,5m	2,5m	3m						
15	12166894	ADHESIVO DISPLAY TP2 FAGOR	FAGOR TP2 DISPLAY STICKER	1	1	1	1	1			X			
16	12119954	TAPON USB	USB CAP	1	1	1	1	1						
17	12126497	ADHESIVO ON/OFF NEGRO	BLACK ON/OFF STICKER	1	1	1	1	1			X			
18	12120271	TAPA MONEDERO COMPLETA	COMPLETE COIN COVER	1	1	1	1	1						

FAGOR
FAGOR INDUSTRIAL

APARATO / APPLIANCE	LAVADORA / WASHER-EXTRACTOR	ZONA / ZONE	A (MUEBLE / UNIT)

ITEM	REFERENCIA REFERENCE	DENOMINACIÓN	DENOMINATION	LR-11 TP2	LR-14 TP2	LR-18 TP2	LR-25 TP2	LR-35 TP2			RECOMENDADOS RECOMMENDED	ELIMINADO ELIMINATED	INTRODUCIDO INTRODUCED	NOTAS / NOTES
19	12170411	PORTAMANDOS SKINPLATE	CONTROL PANEL	1	-	-	-	-						
19	12170410	PORTAMANDOS SKINPLATE	SKINPLATE CONTROL PANEL	-	1	-	-	-						
19	12170407	PORTAMANDOS SKINPLATE	SKINPLATE CONTROL PANEL	-	-	1	-	-						
19	12185643	PORTAMANDOS SKINPLATE	SKINPLATE CONTROL PANEL	-	-	-	1	-						
19	12187479	PORTAMANDOS SKINPLATE	SKINPLATE CONTROL PANEL	-	-	-	-	1						
19	12173745	PORTAMANDOS INOX	INOX CONTROL PANEL	1	-	-	-	-						
19	12171345	PORTAMANDOS INOX	INOX CONTROL PANEL	-	1	-	-	-						
19	12171676	PORTAMANDOS INOX	INOX CONTROL PANEL	-	-	1	-	-						
19	12212058	PORTAMANDOS INOX	INOX CONTROL PANEL	-	-	-	1	-						
19	12184914	PORTAMANDOS INOX	INOX CONTROL PANEL	-	-	-	-	1						
20	12167166	CANTONERA ENCIMERA LAVADORAS	WORKTOP CORNER PIECE	2	2	2	2	2			X			
21	12094428	CERRADURA 0330	0330 LOCK	2	2	2	2	2						
22	12140743	CIERRE COMPLETO UL 205V	UL 205V LOCK	1	1	1	1	1			X			
23	12024758	MIRILLA PUERTA	DOOR GLASS	1	1	-	-	-						
23	12141205	MIRILLA PUERTA	DOOR GLASS	-	-	1	1	-						
23	12048068	MIRILLA PUERTA	DOOR GLASS	-	-	-	-	1						
24	12023284	JUNTA PUERTA	DOOR SEAL	1	1	-	-	-						
24	12141203	JUNTA PUERTA	DOOR SEAL	-	-	1	1	-						
24	12048069	JUNTA PUERTA	DOOR SEAL	-	-	-	-	1						
25	12151887	MARCO PUERTA + TIRADOR	DOOR FRAME + HANDLE	1	1	-	-	-						
25	12161527	MARCO PUERTA + TIRADOR	DOOR FRAME + HANDLE	-	-	1	1	-						
25	12049408	MARCO PUERTA + TIRADOR	DOOR FRAME + HANDLE	-	-	-	-	1			X			
26	12170953	ADHESIVO TIRADOR FAGOR	FAGOR HANDLE STICKER	1	1	1	1	1						
27	12134415	TAPA CIERRE	LOCK COVER	1	1	-	-	-						
27	12168444	TAPA CIERRE	LOCK COVER	-	-	1	1	-						
27	12135486	TAPA CIERRE	LOCK COVER	-	-	-	-	1			X			
28	12227593	EJE CIERRE	LOCK SHAFT	1	1	1	1	1			X			
29	12128011	EMBELLECEDOR CIERRE	LOCK TRIM	1	1	1	1	1			X			
30	12227622	GANCHO REGULABLE CIERRE	ADJUSTABLE LOCK HOOK	1	1	1	1	1						
31	12025215	CASQUILLO PUERTA	DOOR BUSHING	1	1	1	1	1						
32	12040850	MICRORRUPTOR 250V AC 16A	250V AC 16A MICRO-SWITCH	1	-	-	-	-			X			

FAGOR
FAGOR INDUSTRIAL

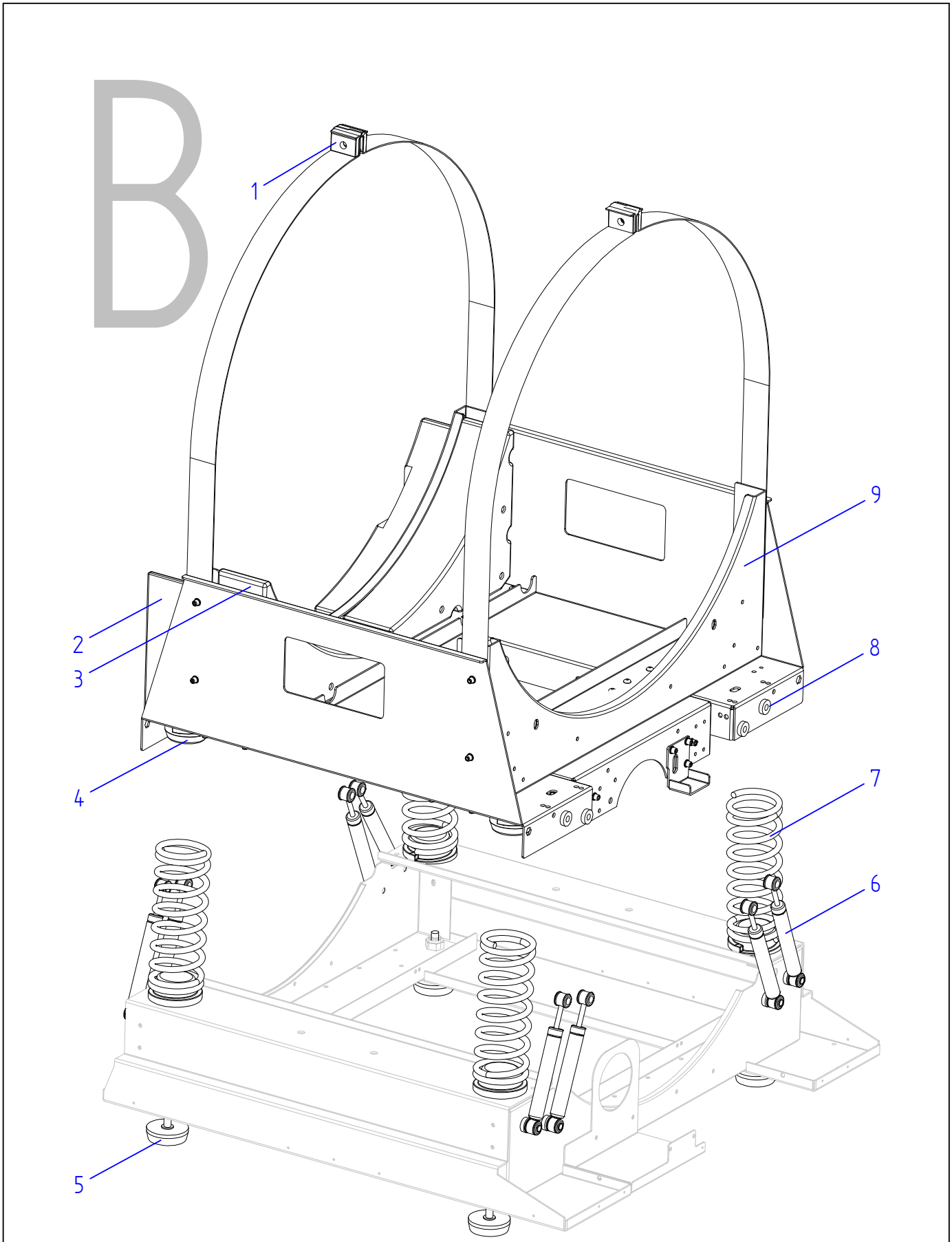

LA_II-35 TP2		
01-2019	ARMAZÓN / FRAME	5

FAGOR
FAGOR INDUSTRIAL

APARATO / APPLIANCE	LAVADORA / WASHER-EXTRACTOR	ZONA / ZONE	B (ARMAZÓN / FRAME)

ITEM	REFERENCIA REFERENCE	DENOMINACIÓN	DENOMINATION	LA-11 TP2	LA-14 TP2	LA-18 TP2	LA-25 TP2	LA-35 TP2			RECOMENDADOS RECOMMENDED	ELIMINADO ELIMINATED	INTRODUCIDO INTRODUCED	NOTAS / NOTES
1	12007919	AMARRE ABRAZADERA	CLAMP FASTENING	4	4	4	4	4						
2	12023250	CONTRAPESO 8	COUNTERWEIGH 8	4	-	-	-	-						
2	12023233	CONTRAPESO 13	COUNTERWEIGH 13	-	4	-	-	-						
2	12023227	CONTRAPESO DELANTERO 18	FRONT COUNTERWEIGH 18	-	-	2	-	-						
2	12023207	CONTRAPESO DELANTERO 25	FRONT COUNTERWEIGH 25	-	-	-	2	-						
2	12098293	CONTRAPESO DELANTERO 35	FRONT COUNTERWEIGH 35	-	-	-	-	2						
3	12023212	CONTRAPESO POSTERIOR 18	BACK COUNTERWEIGH 18	-	-	2	-	-						
3	12023203	CONTRAPESO POSTERIOR 25	BACK COUNTERWEIGH 25	-	-	-	2	-						
3	12098294	CONTRAPESO POSTERIOR 35	BACK COUNTERWEIGH 35	-	-	-	-	2						
4	12023345	BASE MUELLE	SPRING BASE	8	8	8	8	8						
5	12024963	PATAS LAVADORAS	WASHER-EXTRACTOR FOOT	4	4	4	4	4						
6	12025077	AMORTIGUADOR 120N SUSPA	SUSPA 120N DAMPER	4	-	8	-	-			X			
6	12025078	AMORTIGUADOR 90N SUSPA	SUSPA 90N DAMPER	-	8	-	-	-			X			
6	12024980	AMORTIGUADOR 140N SUSPA	SUSPA 140N DAMPER	-	-	-	8	12			X			
7	12023286	MUELLE 8	8 SPRING	4	-	-	-	-						
7	12023287	MUELLE 13	13 SPRING	-	4	-	-	-						
7	12024496	MUELLE 18	18 SPRING	-	-	4								
7	12023259	MUELLE 25	25 SPRING	-	-	-	4	-						
7	12112622	MUELLE 35	35 SPRING	-	-	-	-	4						
8	12023467	CASQUILLO AMORTIGUADORES	DUMPER BUSHING	8	16	16	16	24						
9	12003855	CUNA COMPLETA	COMPLETE CRADLE	1	-	-	-	-						
9	12003877	CUNA COMPLETA	COMPLETE CRADLE	-	1	-	-	-						
9	12004000	CUNA COMPLETA	COMPLETE CRADLE	-	-	1	-	-						
9	12004021	CUNA COMPLETA	COMPLETE CRADLE	-	-	-	1	-						
9	12097429	CUNA COMPLETA	COMPLETE CRADLE	-	-	-	-	1						

FAGOR
FAGOR INDUSTRIAL

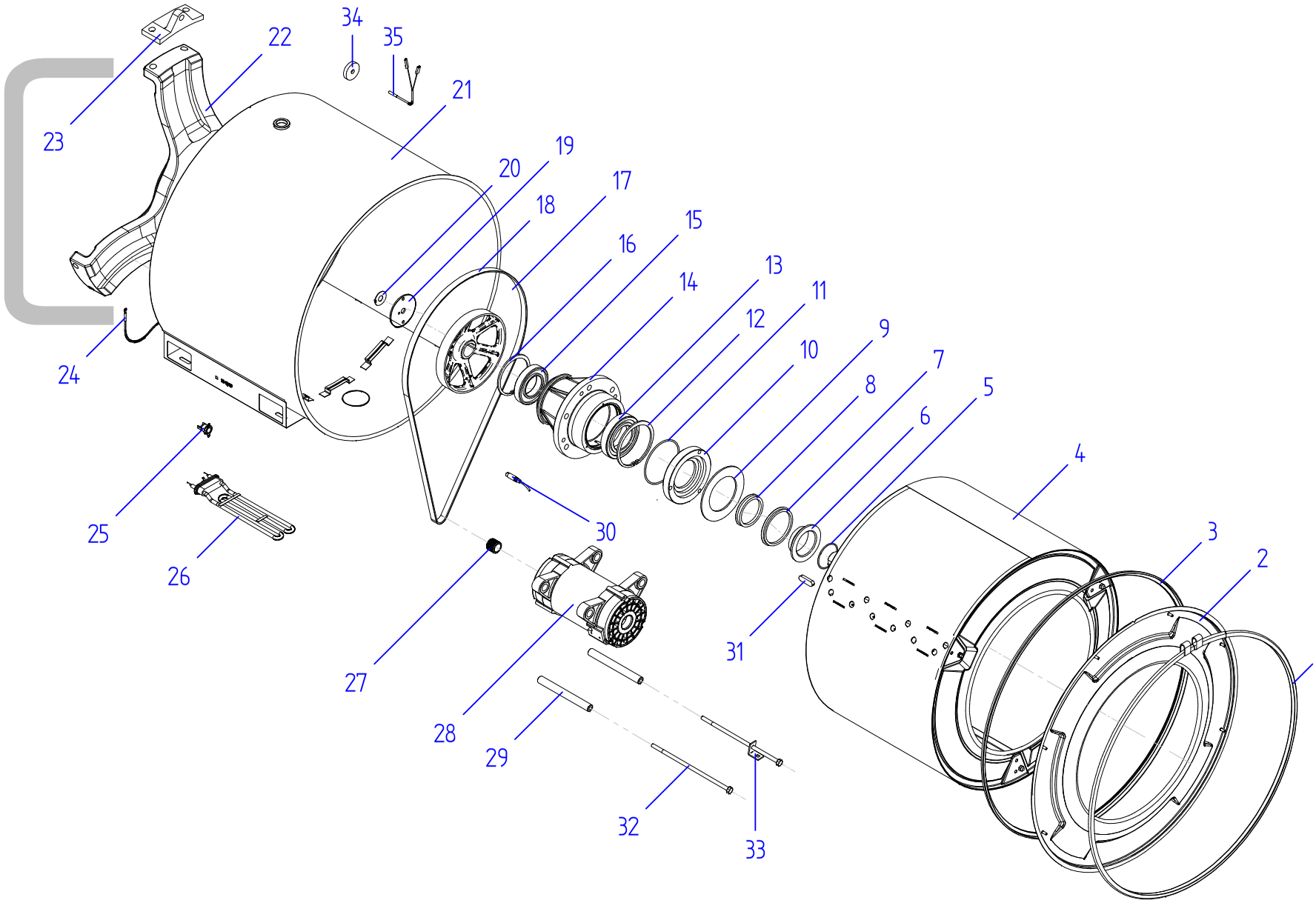

LA_II-35 TP2		
01-2019	TAMBOR / DRUM	6

FAGOR

FAGOR INDUSTRIAL

APARATO / APPLIANCE	LAVADORA / WASHER-EXTRACTOR	ZONA / ZONE	C (TAMBOR / DRUM)

ITEM	REFERENCIA REFERENCE	DENOMINACIÓN	DENOMINATION	LA-11 TP2	LA-14 TP2	LA-18 TP2	LA-25 TP2	LA-35 TP2			RECOMENDADOS RECOMMENDED	ELIMINADO ELIMINATED	INTRODUCIDO INTRODUCED	NOTAS / NOTES
1	12022642	CIERRE CUBA	TUB ENCLOSURE	1	-	-	-	-						
1	12023103	CIERRE CUBA	TUB ENCLOSURE	-	1	-	-	-						
1	12023108	CIERRE CUBA	TUB ENCLOSURE	-	-	1	-	-						
1	12023105	CIERRE CUBA	TUB ENCLOSURE	-	-	-	1	-						
1	12049772	CIERRE CUBA	TUB ENCLOSURE	-	-	-	-	1						
2	12184829	FRENTE CUBA	TUB FRONT	1	1	-	-	-						
2	12140987	FRENTE CUBA	TUB FRONT	-	-	1	-	-						
2	12152012	FRENTE CUBA	TUB FRONT	-	-	-	1	-						
2	12188300	FRENTE CUBA	TUB FRONT	-	-	-	-	1						
3	12023272	JUNTA CUBA	TUB SEAL	1	-	-	-	-						
3	12023268	JUNTA CUBA	TUB SEAL	-	1	-	-	-						
3	12023260	JUNTA CUBA	TUB SEAL	-	-	1	-	-						
3	12023255	JUNTA CUBA	TUB SEAL	-	-	-	1	-						
3	12049084	JUNTA CUBA	TUB SEAL	-	-	-	-	1						
4	12159414	TAMBOR	DRUM	1	-	-	-	-						
4	12004087	TAMBOR	DRUM	-	1	-	-	-						
4	12152600	TAMBOR	DRUM	-	-	1	-	-						
4	12168627	TAMBOR	DRUM	-	-	-	1	-						
4	12097273	TAMBOR	DRUM	-	-	-	-	1						
5	12010078	JUNTA TOR 55x3	55x3 O-RING	1	-	-	-	-						
5	12010067	JUNTA TOR 60x3	60x3 O-RING	-	1	-	-	-						
5	12010054	JUNTA TOR.69x3	69x3 O-RING	-	-	1	-	-						
5	12010019	JUNTA TOR.82x3	82x3 O-RING	-	-	-	1	1						
6	12007773	CASQUILLO EJE	AXIS BUSHING	1	-	-	-	-						
6	12023262	CASQUILLO EJE	AXIS BUSHING	-	1	-	-	-						
6	12023256	CASQUILLO EJE	AXIS BUSHING	-	-	1	-	-						
6	12007749	CASQUILLO EJE	AXIS BUSHING	-	-	-	1	-						
6	12097355	CASQUILLO EJE	AXIS BUSHING	-	-	-	-	1						
7	12025038	RETEN V-RING VA-80 VITON	V-RING RETAINER VA-80 VITON	1		-	-	-						
7	12024987	RETEN V-RING VA-85 VITON	V-RING RETAINER VA-85 VITON	-	1	-	-	-						
7	12024988	RETEN V-RING VA-95 VITON	V-RING RETAINER VA-95 VITON	-	-	1	-	-						
7	12024993	RETEN V-RING VA-100 VITON	V-RING RETAINER VA-100 VITON	-	-	-	1	-						
7	12046264	RETEN VA-110 VITON	V-RING RETAINER VA-110 VITON	-	-	-	-	1						
8	12025226	RETEN V-RING 65 NBR	V-RING RETAINER 65A NBR	1	-	-	-	-						
8	12025221	RETEN V-RING VA-70 NBR	V-RING RETAINER VA-70 VITON	-	1	-	-	-						
8	12025038	RETEN V-RING VA-80 VITON	V-RING RETAINER VA-80 VITON	-	-	1	-	-						
8	12024992	RETEN V-RING VA 90	V-RING RETAINER VA-90 VITON	-	-	-	1	-						
8	12024993	RETEN V-RING VA-100 VITON	V-RING RETAINER VA-100 VITON	-	-	-	-	1						
9	12025098	JUNTA CASQUILLO RETENES	COUNTERSEAL BUSHING SEAL	1	1	-	-	-						

FAGOR
FAGOR INDUSTRIAL

APARATO / APPLIANCE	LAVADORA / WASHER-EXTRACTOR	ZONA / ZONE	C (TAMBOR / DRUM)

ITEM	REFERENCIA REFERENCE	DENOMINACIÓN	DENOMINATION	LA-11 TP2	LA-14 TP2	LA-18 TP2	LA-25 TP2	LA-35 TP2			RECOMENDADOS RECOMMENDED	ELIMINADO ELIMINATED	INTRODUCIDO INTRODUCED	NOTAS / NOTES
9	12025083	JUNTA CASQUILLO RETENES	COUNTERSEAL BUSHING SEAL	-	-	1	-	-						
9	12025015	JUNTA CASQUILLO RETENES	COUNTERSEAL BUSHING SEAL	-	-	-	1	-						
9	12134295	JUNTA CASQUILLO RETENES	COUNTERSEAL BUSHING SEAL	-	-	-	-	1						
10	12023238	CASQUILLO CONTRA RETEN	COUNTERSEAL BUSHING	1	-	-	-	-						
10	12023224	CASQUILLO CONTRA RETEN	COUNTERSEAL BUSHING	-	1	-	-	-						
10	12023213	CASQUILLO CONTRA RETEN	COUNTERSEAL BUSHING	-	-	1	-	-						
10	12023205	CASQUILLO CONTRA RETEN	COUNTERSEAL BUSHING	-	-	-	1	-						
10	12097308	CASQUILLO CONTRA RETEN	COUNTERSEAL BUSHING	-	-	-	-	1						
11	12009980	JUNTA TORICA 102x3	O-RING 102x3	1	-	-	-	-						
11	12009940	JUNTA TORICA 114x3	O-RING 114x3	-	1	-	-	-						
11	12009926	JUNTA TORICA 128x3	O-RING 128x3	-	-	1	-	-						
11	12010168	JUNTA TORICA 150x3	O-RING 150x3	-	-	-	1	-						
11	12025230	JUNTA TORICA 200x3	O-RING 200x3	-	-	-	-	1						
12	12024621	ANILLO SEGURIDAD 100 DIN 472	LOCKING RING 100 DIN 472	1	-	-	-	-						
12	12009802	ANILLO SEGURIDAD J110X4 DIN472	LOCKING RING J110X4 DIN472	-	1	-	-	-						
12	12024901	ANILLO SEGURIDAD 125 DIN 472	LOCKING RING 125 DIN 472	-	-	1	-	-						
12	12049333	ANILLO SEG. 140x4 DIN 472	LOCKING RING 140x4 DIN 472	-	-	-	1	-						
12	12124798	ANILLO SEG. 190 DIN472-I	LOCKING RING 190 DIN472-I	-	-	-	-	1						
13	12024842	RODAMIENTO 6211-2RS1C3	BEARING 6211-2RS1C3	1	-	-	-	-						
13	12023485	RODAMIENTO 6212-2RS1	BEARING 6212-2RS1	-	1	-	-	-						
13	12023445	RODAMIENTO 6214-2RS1	BEARING 6214-2RS1	-	-	1	-	-						
13	12023411	RODAMIENTO 6216-2RS1	BEARING 6216-2RS1	-	-	-	1	-						
13	12097295	RODAMIENTO 6318 DDU	BEARING 6318 DDU	-	-	-	-	1						
14	12095450	SOP RODAMIENTOS MECANIZADO	MECHANIIZED BEARING SUPPORT	1	-	-	-	-						
14	12095451	SOP RODAMIENTOS MECANIZADO	MECHANIIZED BEARING SUPPORT	-	1	-	-	-						
14	12095452	SOP RODAMIENTOS MECANIZADO	MECHANIIZED BEARING SUPPORT	-	-	1	-	-						
14	12095453	SOP RODAMIENTOS MECANIZADO	MECHANIIZED BEARING SUPPORT	-	-	-	1	-						
14	12096461	SOP RODAMIENTOS MECANIZADO	MECHANIIZED BEARING SUPPORT	-	-	-	-	1						
	12010114	ARAND. SEG. 13 DIN 463	SAFETY WASHER 13 DIN 463	6	6	-	-	-						
	12010075	ARAND. SEG. 15 DIN 463	SAFETY WASHER 15 DIN 463	-	-	6	-	-						
	12010072	ARAND. SEG. 16 DIN 463	SAFETY WASHER 16 DIN 463	-	-	-	10	10						
	12009880	TORNILLLO M12X40MM DIN933	SCREW M12X40MM DIN933	6	-	-	-	-						
	12009902	TORNILLLO M12X55MM DIN931	SCREW M12X55MM DIN931	-	6	-	-	-						
	12009931	TORNILLLO M14X70MM DIN931	SCREW M14X70MM DIN931	-	-	6	10	-						
	12009917	TORNILLLO M16X80MM DIN931	SCREW M16X80MM DIN933	-	-	-	-	10						
15	12024905	RODAMIENTO 6209-2ZC3	BEARING 6209-2ZC3	1	-	-	-	-						
15	12024886	RODAMIENTO 6210 DDU C3	BEARING 6210 DDU C3	-	1	-	-	-						
15	12023485	RODAMIENTO 6212-2RS1	BEARING 6212-2RS1	-	-	1	-	-						
15	12023428	RODAMIENTO 6312-2Z	BEARING 6312-2Z	-	-	-	1	-						

FAGOR
FAGOR INDUSTRIAL

APARATO / APPLIANCE	LAVADORA / WASHER-EXTRACTOR	ZONA / ZONE	C (TAMBOR / DRUM)

ITEM	REFERENCIA REFERENCE	DENOMINACIÓN	DENOMINATION	LA-11 TP2	LA-14 TP2	LA-18 TP2	LA-25 TP2	LA-35 TP2			RECOMENDADOS RECOMMENDED	ELIMINADO ELIMINATED	INTRODUCIDO INTRODUCED	NOTAS / NOTES
15	12097296	RODAMIENTO 6316-ZZ	BEARING 6316-ZZ	-	-	-	-	1						
16	12009847	ANILLO SEG. INT. 85 DIN 472	LOCKING RING 85 DIN 472	1	-	-	-	-						
16	12009858	ANILLO SEGURIDAD 90 DIN 472	LOCKING RING 90 DIN 472	-	1	-	-	-						
16	12009802	ANILLO SEGURIDAD J110X4 DIN 472	LOCKING RING J110X4 DIN 472	-	-	1	-	-						
16	12009798	ANILLO SEG. 130 DIN-472	LOCKING RING 130 DIN-472	-	-	-	1	-						
16	12124794	ANILLO SEG. 170 DIN472-I	LOCKING RING 170 DIN472-I	-	-	-	-	1						
17	12023279	POLEA TAMBOR	DRUM PULLEY	1	-	-	-	-						
17	12024919	POLEA TAMBOR	DRUM PULLEY	-	1	1	-	-						
17	12023249	POLEA TAMBOR	DRUM PULLEY	-	-	-	1	-						
17	12097389	POLEA TAMBOR	DRUM PULLEY	-	-	-	-	1						
18	12023273	CORREA LF-18	BELT LF-18	1	1	-	-	-			X			
18	12023269	CORREA POLY-V PJ 8 1854	BELT POLY-V PJ 8 1854	-	-	1	-	-			X			
18	12023267	CORREA PJ 1854	BELT PJ 1854	-	-	-	1	-			X			
18	12023252	CORREA POLY-V 12PJ1956	BELT POLY-V 12PJ1956	-	-	-	-	1			X			
18	12153177	CORREA POLY-V 12PJ1956	BELT POLY-V 12PJ1956	-	-	-	-	1			X			
19	12021847	ARANDELA POLEA TAMBOR	DRUM PULLEY WASHER	1	-	-	-	-						
19	12021832	ARANDELA POLEA TAMBOR	DRUM PULLEY WASHER	-	1	1	1	-						
19	12114004	ARANDELA POLEA TAMBOR	DRUM PULLEY WASHER	-	-	-	-	1						
20	12009896	ARANDELA SEGURIDAD	LOCKING RING	1	1	1	1	1						
21	12188193	CUBA COMPLETA	COMPLETE TUB	1	-	-	-	-						
21	12184815	CUBA COMPLETA	COMPLETE TUB	-	1	-	-	-						
21	12170444	CUBA COMPLETA	COMPLETE TUB	-	-	1	-	-						
21	12170449	CUBA COMPLETA	COMPLETE TUB	-	-	-	1	-						
21	12187515	CUBA COMPLETA	COMPLETE TUB	-	-	-	-	1						
22	12023200	REFUERZO FONDO CUBA	TUB BASE REINFORCEMENT	1	-	-	-	-						
22	12023193	REFUERZO FONDO CUBA	TUB BASE REINFORCEMENT	-	1	-	-	-						
22	12023188	REFUERZO FONDO CUBA	TUB BASE REINFORCEMENT	-	-	1	-	-						
22	12023187	REFUERZO FONDO CUBA	TUB BASE REINFORCEMENT	-	-	-	1	-						
22	12046408	REFUERZO FONDO CUBA	TUB BASE REINFORCEMENT	-	-	-	-	1						
	12009868	ARANDELA PLANA 6MM DIN125	FLAT WASHER 6MM DIN125	3	3	3	5	5						
	12010106	TORNILLO DIN 912 M6X35	SCREW DIN 912 M6X35	3	3	3	5	5						
23	12023348	APOYO TORNILLOS 8	SCREW SUPPORT 8	3	-	-	-	-						
23	12023329	APOYO TORNILLOS 13	SCREW SUPPORT 13	-	3	-	-	-						
23	12023317	APOYO TORNILLOS 18	SCREW SUPPORT 18	-	-	3	-	-						
23	12023327	APOYO TORNILLOS 25	SCREW SUPPORT 25	-	-	-	3	-						
23	12097420	APOYO TORNILLOS 35	SCREW SUPPORT 35	-	-	-	-	3						
	12009902	TORNILLO HEX. M12X55MM DIN931	HEXAG. SCREW M12X55MM DIN931	6	-	-	-	-						
	12009887	TORNILLO HEX. M14X50MM DIN931	HEXAG. SCREW M14X50MM DIN931	-	6	-	-	-						
	12009814	TORNILLO HEX. M14X70MM DIN933	HEXAG. SCREW M14X70MM DIN933	-	-	6	10	-						

APARATO / APPLIANCE	LAVADORA / WASHER-EXTRACTOR	ZONA / ZONE	C (TAMBOR / DRUM)

ITEM	REFERENCIA REFERENCE	DENOMINACIÓN	DENOMINATION	LA-11 TP2	LA-14 TP2	LA-18 TP2	LA-25 TP2	LA-35 TP2			RECOMENDADOS RECOMMENDED	ELIMINADO ELIMINATED	INTRODUCIDO INTRODUCED	NOTAS / NOTES
	12009917	TORNILLO HEX. M16X80MM DIN933	HEXAG. SCREW M16X80MM DIN933	-	-	-	-	10						
	12010089	TC AUTOBLOC. FE ZN M14 DIN985	TC AUTOBLOC. FE ZN M14 DIN985	6	6	6	6	-						
	12010061	TC AUTOBLOC. FE ZN M16 DIN985	TC AUTOBLOC. FE ZN M16 DIN985	-	-	-	-	6						
24	12025036	CONJUNTO SONDA 64KOhmio NTC	PROBE 64KOhm NTC	1	1	1	1	1			X			
25	12096597	TERMOSTATO DE SEGURIDAD	SAFETY THERMOSTAT	1	1	1	1	1			X			
26	12096226	RESISTENCIA 2000W 264MM	RESISTANCE 2000W 264MM	3	-	-	-	-			X			
26	12096023	RESISTENCIA 3000W 277MM	RESISTANCE 3000W 277MM	-	3	-	-	-			X			
26	12096051	RESISTENCIA 4000W 347MM	RESISTANCE 4000W 347MM	-	-	3	-	-			X			
26	12041359	RESISTENCIA 6.000W 509MM	RESISTANCE 6.000W 509MM	-	-	-	3	-			X			
26	12092855	RESISTENCIA 7.000W 562MM	RESISTANCE 7.000W 562MM	-	-	-	-	3			X			
27	12004158	POLEA MOTOR	ENGINE PULLEY	1	-	-	-	-						
27	12004159	POLEA MOTOR	ENGINE PULLEY	-	1	1	-	-						
28	12023197	MOTOR 230V AC 3 50/60Hz 750W	230V AC 3 50/60Hz 750W ENGINE	1	-	-	-	-			X			
28	12023195	MOTOR 230V AC 3 50/60Hz 1,1kW	230V AC 3 50/60Hz 1,1kW ENGINE	-	1	-	-	-			X			
28	12023194	MOTOR 230V AC 3 50/60Hz 2,2kW	230V AC 3 50/60Hz 2,2kW ENGINE	-	-	1	-	-			X			
28	12172751	MOTOR 230V AC 3 60Hz 4kW	230V AC 3 60Hz 4kW ENGINE	-	-	-	1	-			X			
28	12046405	MOTOR 230V AC 3 50Hz 4kW	230V AC 3 50Hz 4kW ENGINE	-	-	-	-	1			X			
29	12023322	TUBO SOPORTE MOTOR	ENGINE SUPPORT TUBE	2	-	-	-	-						
29	12023319	TUBO SOPORTE MOTOR	EMGINE SUPPORT TUBE	-	2	-	-	-						
29	12023310	TUBO SOPORTE MOTOR	ENGINE SUPPORT TUBE	-	-	2	-	-						
29	12023307	TUBO SOPORTE MOTOR	ENGINE SUPPORT TUBE	-	-	-	2	2						
30	12114100	SENSOR MAGNÉTICO 12V	12V MAGNETIC SENSOR	1	1	1	1	1			X			
31	12025234	CHAVETA 12x8x40 DIN 6885	12x8x40 DIN 6885 SHAFT KEY	1	-	-	-	-						
31	12025213	CHAVETA TIPO A 14x9x50 DIN 6885	14x9x50 DIN 6885 TYPE A SHAFT KEY	-	1	1	1	-						
31	12115159	CHAVETA TIPO A 20x12x63 DIN 6885	20x12x63 DIN 6885 TYPE A SHAFT KEY	-	-	-	-	1						
32	12009921	TORNILLO FE ZN M10X150MM DIN931	SCREW FE ZN M10X150MM DIN931	2	-	-	-	-						
32	12009900	TORNILLO FE ZN M10X180MM DIN931	SCREW FE ZN M10X180MM DIN931	-	2	-	-	2						
32	12009818	TORNILLO FE PV M10X220MM DIN931	SCREW FE PV M10X220MM DIN931	-	-	2	2	-						
33	12023118	TENSOR MOTOR	ENGINE TENSOR	1	1	1	1	1						
34	12023314	IMÁN SENSOR DE DESEQUILIBRIO	IMBALANCE SENSOR MAGNET	-	1	1	1	1						
35	12024477	SENSOR DE DESEQUILINRIO	IMBALANCE SENSOR	-	1	1	1	1			X			

FAGOR
FAGOR INDUSTRIAL

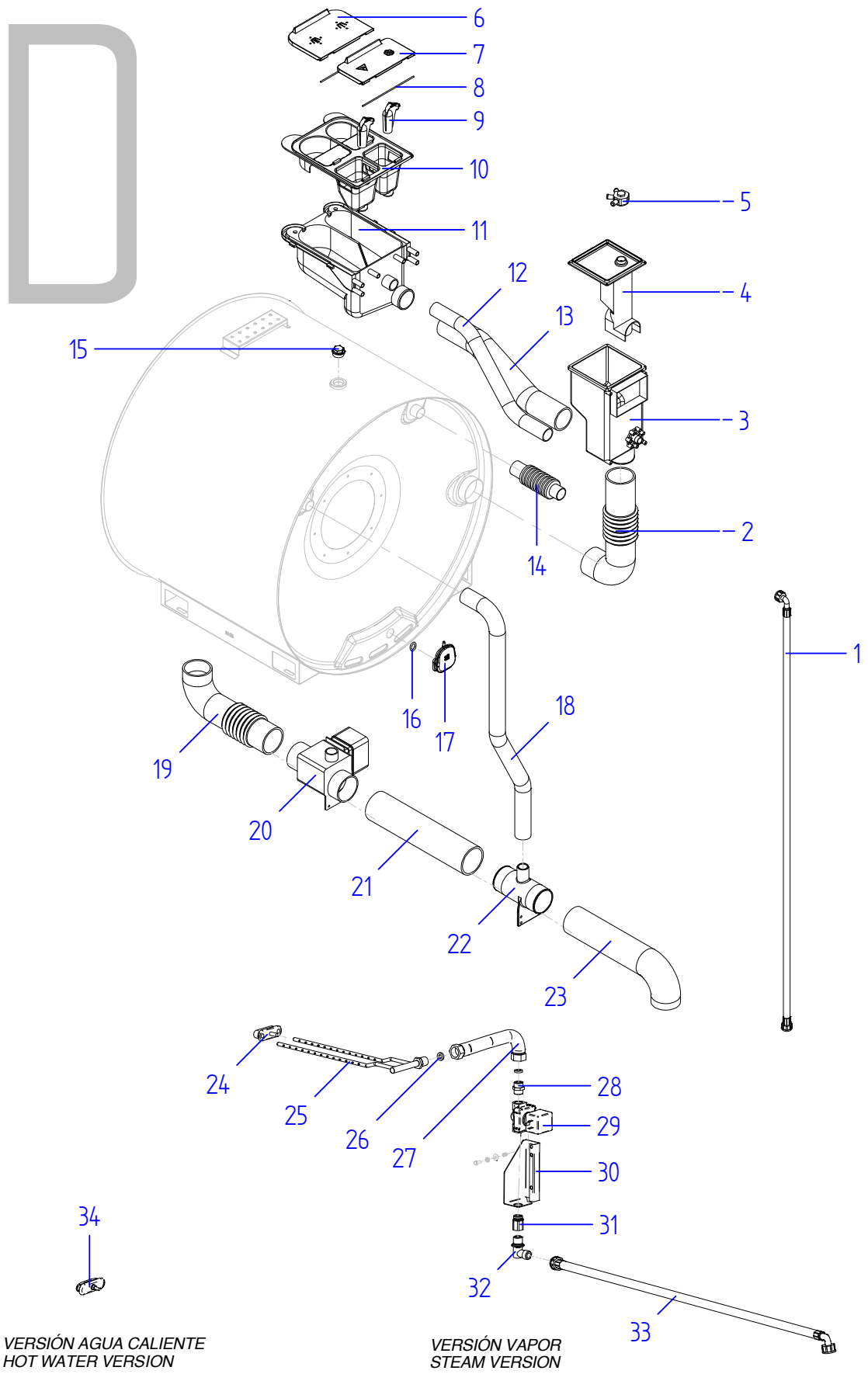
D
6
7
8
9
10
11
5
12
4
13
15
3
2
14
1
16
17
18
19
20
21
22
23
24
25
26
27
28
29
30
31
32
33
34
VERSIÓN AGUA CALIENTE
HOT WATER VERSION
VERSIÓN VAPOR
STEAM VERSION

APARATO / APPLIANCE	LAVADORA / WASHER-EXTRACTOR	ZONA / ZONE	D (CONJUNTO HIDRÁULICO / HYDRAULIC ASSEMBLY)

ITEM	REFERENCIA REFERENCE	DENOMINACIÓN	DENOMINATION	LA-11 TP2	LA-14 TP2	LA-18 TP2	LA-25 TP2	LA-35 TP2			RECOMENDADOS RECOMMENDED	ELIMINADO ELIMINATED	INTRODUCIDO INTRODUCED	NOTAS / NOTES
1	12024115	MANGUERA ENTRADA AGUA	WATER INLET HOSE	3	3	3	3	3						
2	12023263	CONDUCTO DOSIFICADOR CUBA	DISPENSER TO TUB PIPE	1	-	-	-	1						
2	12025016	CONDUCTO DOSIFICADOR CUBA	DISPENSER TO TUB PIPE	-	1	-	-	-						
2	12025017	CONDUCTO DOSIFICADOR CUBA	DISPENSER TO TUB PIPE	-	-	1	1	1						
3	12130844	CUERPO COLECTOR WRAS	WRAS COLLECTOR BOX BODY	1	1	1	1	1						
4	12130861	TAPA COLECTOR WRAS	WRAS COLLECTOR BOX LID	1	1	1	1	1						
5	12130902	ENTRADA COLECTOR WRAS	WRAS COLLECTOR BOX INLET	1	1	1	1	-						
5	12130892	ENTRADA COLECTOR WRAS	WRAS COLLECTOR BOX INLET	-	-	-	-	1						
6	12010403	TAPA 1	LID 1	1	1	1	1	1						
7	12000747	TAPA 2	LID 2	1	1	1	1	1						
8	12010483	EJE TAPAS	LID SHAFT	2	2	2	2	2						
9	12000746	CUERPO SIFÓN	SIPHON BODY	2	2	2	2	2						
10	12010401	CUERPO RECIPIENTES	CONTAINER BODY	1	1	1	1	1						
11	12010402	CUERPO RECIPIENTES 2	CONTAINER BODY 2	1	1	1	1	1						
12	12091758	CONDUCTO REBOSADERO CUBETERA	TRAY OVERFLOW PIPE	1	-	-	-	-						
12	12007856	CONDUCTO REBOSADERO CUBETERA	TRAY OVERFLOW PIPE	-	1	-	-	-						
12	12007839	CONDUCTO REBOSADERO CUBETERA	TRAY OVERFLOW PIPE	-	-	1	-	-						
12	12007825	CONDUCTO REBOSADERO CUBETERA	TRAY OVERFLOW PIPE	-	-	-	1	-						
12	12007811	CONDUCTO REBOSADERO CUBETERA	TRAY OVERFLOW PIPE	-	-	-	-	1						
13	12007772	CONDUCTO CUBETERA	TRAY PIPE	1	1	-	-	-						
13	12007776	CONDUCTO CUBETERA	TRAY PIPE	-	-	1	-	-						
13	12007763	CONDUCTO CUBETERA	TRAY PIPE	-	-	-	1	-						
13	12007756	CONDUCTO CUBETERA	TRAY PIPE	-	-	-	-	1						
14	12023308	CONDUCTO SALIDA VAPOR	STEAM OUTLET HOSE	1	1	1	-	1						
14	12007766	CONDUCTO SALIDA VAPOR	STEAM OUTLET HOSE	-	-	-	1	-						
15	12128218	TAPÓN CUBA	TUB CAP	-	1	1	1	1						
16	12134512	JUNTA TÓRICA PRESOSTATO	PRESSURE CHAMBER O-RING	1	1	1	1	1						
17	12134660	PRESOSTATO CUBA	TUB PRESSURE CHAMBER	1	1	1	1	1						
18	12023265	CONDUCTO REBOSADERO CUBA	TUB OVERFLOW PIPE	1	-	-	-	-						
18	12023271	CONDUCTO REBOSADERO CUBA	TUB OVERFLOW PIPE	-	1	-	-	-						
18	12024866	CONDUCTO REBOSADERO CUBA	TUB OVERFLOW PIPE	-	-	1	-	-						
18	12024833	CONDUCTO REBOSADERO CUBA	TUB OVERFLOW PIPE	-	-	-	1	1						
19	12044165	CONDUCTO DESAGÜE CUBA	TUB DRAINAGE PIPE	1	1	1	-	1						
19	12025016	CONDUCTO DESAGÜE CUBA	TUB DRAINAGE PIPE	-	-	-	1	-						
20	12137690	ELECTROV 230V AC 50/50 Hz	230V AC 50/50 Hz ELECTROV	1	1	1	1	1			X			
21	12046143	CONDUCTO SALIDA ELECTROV	DRAIN VALVE OUTLET PIPE	1	1	-	-	-						
21	12046139	CONDUCTO SALIDA ELECTROV	DRAIN VALVE OUTLET PIPE	-	-	1	-	-						
21	12046144	CONDUCTO SALIDA ELECTROV	DRAIN VALVE OUTLET PIPE	-	-	-	1	1						
22	12046868	SALIDA DESAGÜE 3"	3" DRAINAGE OUTLET	1	1	1	1	1						

FAGOR
FAGOR INDUSTRIAL

APARATO / APPLIANCE	LAVADORA / WASHER-EXTRACTOR	ZONA / ZONE	D (CONJUNTO HIDRÁULICO / HYDRAULIC ASSEMBLY)

ITEM	REFERENCIA REFERENCE	DENOMINACIÓN	DENOMINATION	LA-11 TP2	LA-14 TP2	LA-18 TP2	LA-25 TP2	LA-35 TP2			RECOMENDADOS RECOMMENDED	ELIMINADO ELIMINATED	INTRODUCIDO INTRODUCED	NOTAS / NOTES
23	12025026	CONDUCTO SALIDA DESAGÜE	DRAINAGE PIPE	1	1	1	1	1						
24	12024539	TAPON CIERRE COMPLETO	COMPLETE CLOUSURE CAP	2	2	2	2	2						solo versión a vapor / steam version only
24	12024508	TAPÓN CIERRE VAPOR	STEAM CLOUSURE CAP	1	1	1	1	1						solo versión a vapor / steam version only
25	12021970	INYECTOR VAPOR 8,13,18	STEAM JET 10,13,18	1	1	1	-	-						solo versión a vapor / steam version only
25	12021640	INYECTOR VAPOR 25	STEAM JET 25, 35	-	-	-	1	1						solo versión a vapor / steam version only
26	12025033	ARANDELA VAPOR 8/13/18	STEAM WASHER 8/13/18	4	4	4	4	4						solo versión a vapor / steam version only
27	12023461	LATIGUILLO VAP. 10-13-18 PLANO	STEAM HOSE 10-136-18 FLAT	1	1	1	-	-						solo versión a vapor / steam version only
27	12023410	LATIGUILLO IZQUIERDO 25 PLANO	LEFT STEAM HOSE 25 FLAT	-	-	-	1	1						solo versión a vapor / steam version only
28	12008907	MANGUITO DOBLE 1/2	1/2 DOUBLE CONNECTION	1	1	1	-	-						solo versión a vapor / steam version only
28	12024396	MANGUITO 3/4	3/4 CONNECTION	-	-	-	1	1						solo versión a vapor / steam version only
29	12023340	VÁLVULA VAPOR 1/2 50/60HZ	STEAM VALVE 1/2 50/60HZ	1	1	1	1	-			X			solo versión a vapor / steam version only
29	12024331	VÁLVULA VAPOR 3/4" 60HZ.	STEAM VALVE 3/4 60HZ	-	-	-	-	1			X			solo versión a vapor / steam version only
30	12021873	SOPORTE VALVULA DE VAPOR	STEAM VALVE SUPPORT	1	1	1	-	-						solo versión a vapor / steam version only
30	12021899	SOPORTE VALVULA DE VAPOR 25	STEAM VALVE SUPPORT 25	-	-	-	1	1						solo versión a vapor / steam version only
31	12008219	RACOR 1-2	1-2 CONNECTION	1	1	1	1	1						solo versión a vapor / steam version only
32	12009102	CODO LATON	L-BEND	1	1	1	-	-						solo versión a vapor / steam version only
32	12023591	CODO M-H 3/4" LATON	L-BEND M-H 3/4"	-	-	-	1	1						solo versión a vapor / steam version only
33	12024330	MANGUERA VAPOR 10-13-18	STEAM HOSE 10-13-18	1	1	1	-	-						solo versión a vapor / steam version only
33	12024529	MANGUERA VAPOR 25 PLANA	FLAT STEAM HOSE 25	-	-	-	1	1						solo versión a vapor / steam version only
34	12024539	TAPÓN CIERRE COMPLETO	COMPLETE CLOSSURE CAP	3	3	3	3	3						solo versión a agua caliente / hot water version only

FAGOR
FAGOR INDUSTRIAL

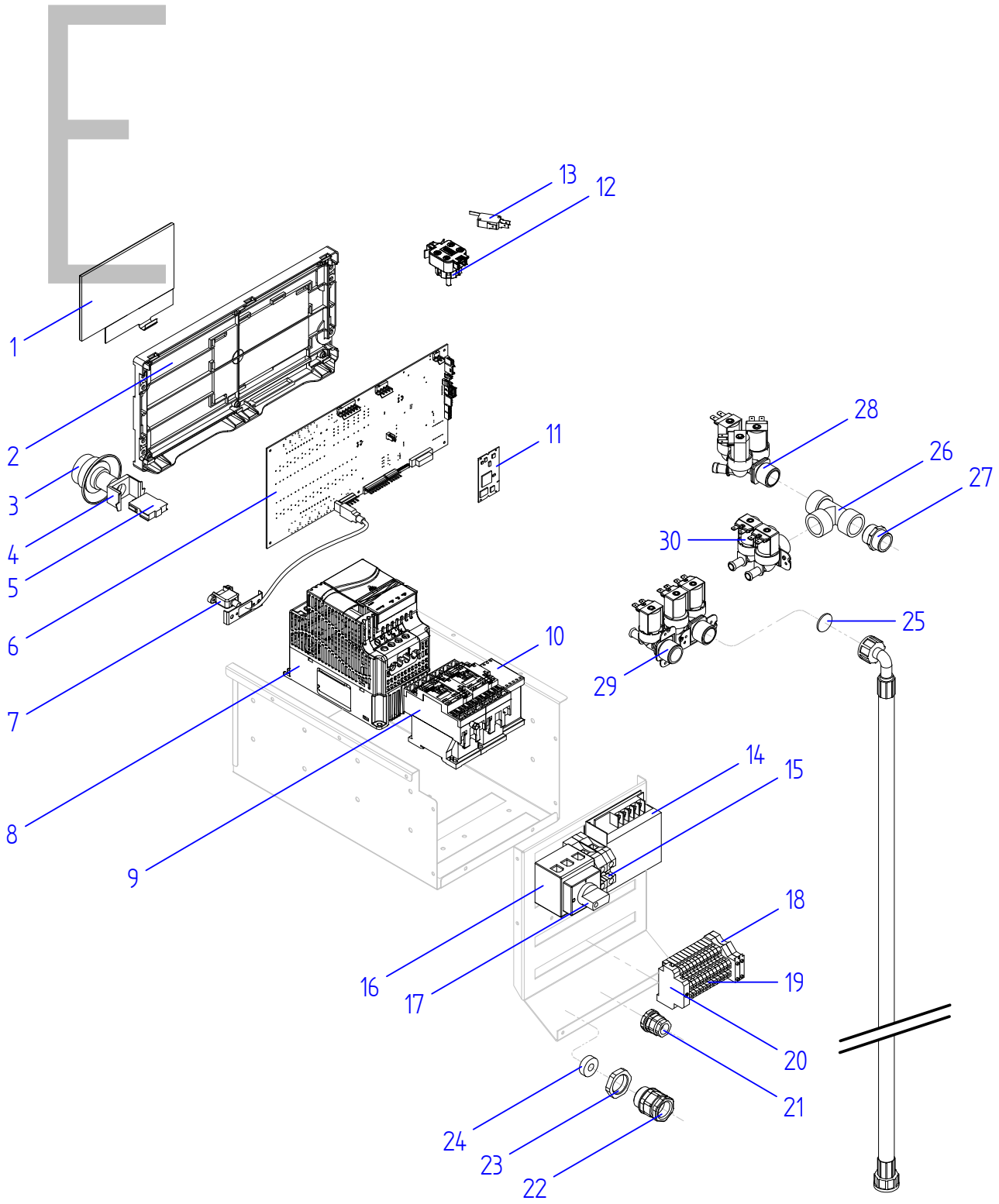
1
2
3
4
5
6
7
8
9
10
11
12
13
14
15
16
17
18
19
20
21
22
23
24
25
26
27
28
29
30

APARATO / APPLIANCE	LAVADORA / WASHER-EXTRACTOR	ZONA / ZONE	E (CUADRO ELÉCTRICO / ELECTRIC BOARD)

ITEM	REFERENCIA REFERENCE	DENOMINACIÓN	DENOMINATION	LA-11 TP2	LA-14 TP2	LA-18 TP2	LA-25 TP2	LA-35 TP2			RECOMENDADOS RECOMMENDED	ELIMINADO ELIMINATED	INTRODUCIDO INTRODUCED	NOTAS / NOTES
1	12157588	DISPLAY TP 7"	7" TP DISPLAY	1	1	1	-	-			X			
2	12165732	SOPORTE MAIN BOARD	MAIN BOARD SUPPORT	1	1	1	-	-						
3	12120235	SETA DE EMERGENCIA	EMERGENCY STOP BUTTON	1	1	1	-	-			X			
4	12120238	SOPORTE SETA EMERGENCIA	EMERGENCY STOP SUPPORT	1	1	1	-	-			X			
5	12120237	PULSAD. 250V AC 16A 1VIA 2POS UL	250V AC 16A 1WAY 2POS UL SWITCH	1	1	1	-	-			X			
6	12168823	TARJETA PRINCIPAL TP2	TP2 MAIN BOARD	1	1	1	-	-			X			
7	12133373	CABLE USB MACHO-HEMBRA	USB WIRE MALE-FEMALE	1	1	1	-	-			X			
8	12116803	VARIADOR DELTA PROGRAMADO	PROGRAMMED DELTA INVERTER	1	-	-	-	-			X			
8	12116804	VARIADOR DELTA PROGRAMADO	PROGRAMMED DELTA INVERTER	-	1	-	-	-			X			
8	12116805	VARIADOR DELTA PROGRAMADO	PROGRAMMED DELTA INVERTER	-	-	1	-	-			X			
9	12024040	CONTACTOR 230V AC 20A 4via UL	230V AC 20A 4via UL CONTACTOR	2	2	2	-	-			X			
10	12024011	CONTACTOR 230V AC 16A 4via UL	230V AC 16A 4via UL CONTACTOR	1	1	1	-	-			X			
11	12121574	MODULO PROCESADOR GRABADO	RECORDED PROCESSOR MODULE	1	1	1	-	-			X			
12	12128262	SENSOR DE PRESION 50mbar	50mbar PRESSURE SENSOR	1	1	1	-	-			X			
13	12024696	MICRORRUPTOR PUERTA	DOOR MICROSWITCH	1	1	1	-	-						
14	12116823	TRANSFORMADOR 1N 50W 240V/12V	1N 50W 240V/12V UL TRANSFORMER	1	1	1	-	-			X			
15	12024515	BORNA TIERRA 35MM	GROUND CONNECTOR 35MM	1	1	1	-	-						
16	12025143	BORNA NEUTRA AZUL 35MM2 1vía UL	BLUE NEUTRAL CONNECTOR 35MM2	1	1	1	-	-						
17	12024858	INTERRUP. 32A 3VIA 2POS SECCI UL	32A 3WAY 2POS ISOLATOR SWITCH	1	-	-	-	-			X			
17	12024628	INTERRUP. 63A 3VIA 2POS SECCI UL	63A 3WAY 2POS ISOLATOR SWITCH	-	1	1	-	-			X			
18	12025158	BORNA PORTAFUSIBLE 6,3A 1 VIA	FUSE HOLDER CONNECTOR 6,3A	2	2	2	-	-						
19	12025180	REGLETA 2 PISOS 24A 2,50MM2 UL	24A 2,5MM2 UL TERMINAL BLOCK	12	12	12	-	-						
20	12024199	TOPE FINAL	END STOP	1	1	1	-	-						
21	12009966	PRENSA ESTOPA DOSIFICACION	DISPENSER STUFFING BOX	1	1	1	-	-						
22	12009927	PRENSA ESTOPA PG-21	STUFFING BOX PG-21	1	1	1	-	-						
23	12010063	CONTRATUERCA	LOCKNUT	1	1	1	-	-						
24	12009994	JUNTA GOMA (GAES)	RUBBER SEAL	1	1	1	-	-						
25	12025278	FILTRO DE JUNTA N-3	JOINT FILTER N-3	3	3	3	-	-						
26	12024996	Te A 90º 3/4	T at 90º 3/4	1	1	1	-	-						
27	12024396	MANGUITO 3/4"	3/4" CONNECTION	1	1	1	-	-						
28	12023921	ELECTROVALVULA 3 VIAS	3 WAY SOLENOID VALVE	1	1	1	-	-			X			
29	12025161	ELECTROVALVULA SIMPLE	SIMPLE SOLENOID VALVE	1	1	1	-	-			X			
30	12023794	ELECTROVALVULA 2 VIAS	2 WAY SOLENOID VALVE	2	2	2	-	-			X			

FAGOR
FAGOR INDUSTRIAL

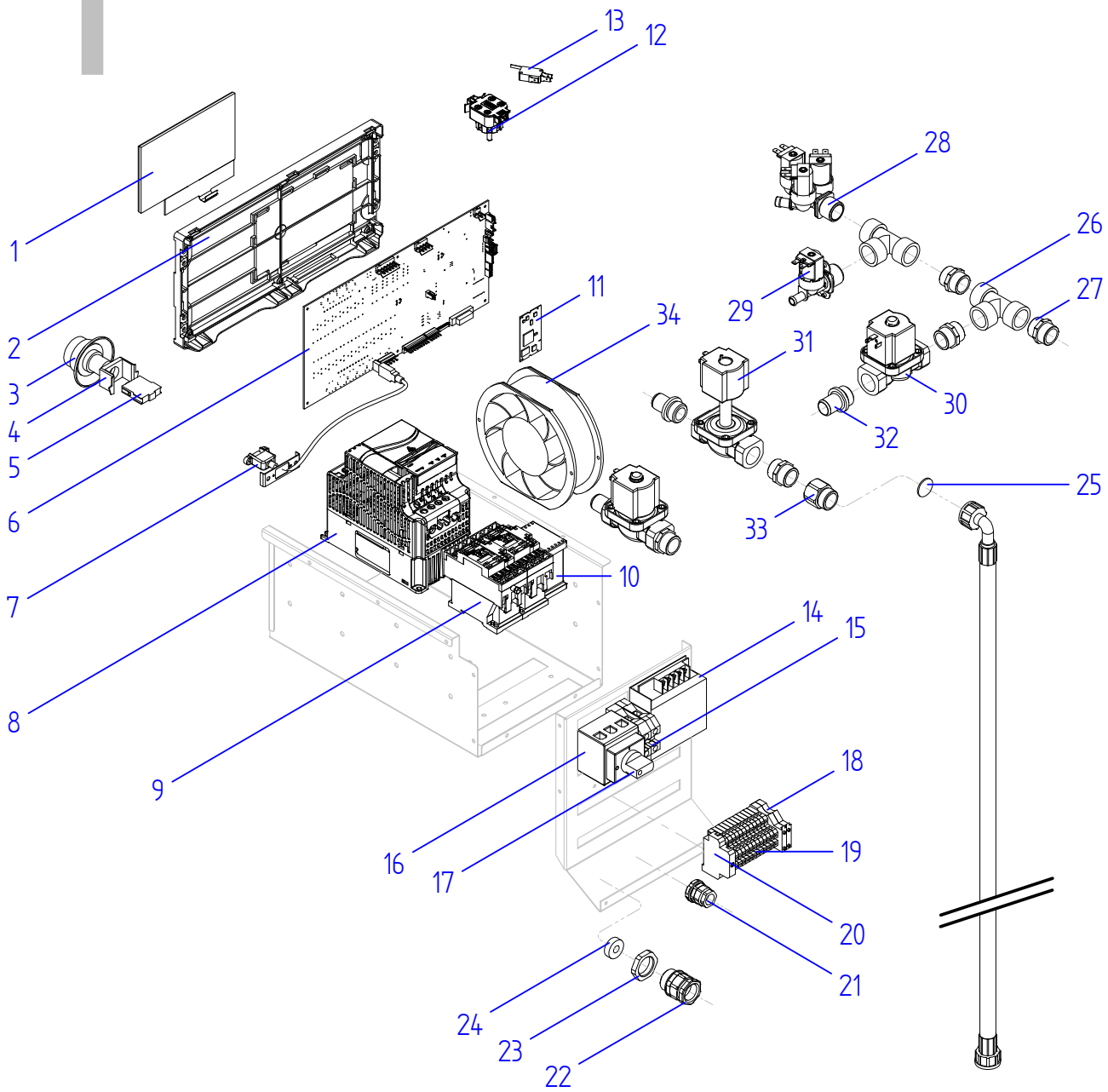
1
2
3
4
5
6
7
8
9
10
11
12
13
14
15
16
17
18
19
20
21
22
23
24
25
26
27
28
29
30
31
32
33
34

APARATO / APPLIANCE	LAVADORA / WASHER-EXTRACTOR	ZONA / ZONE	F (CUADRO ELÉCTRICO / ELECTRIC BOARD)

ITEM	REFERENCIA REFERENCE	DENOMINACIÓN	DENOMINATION	LA-11 TP2	LA-14 TP2	LA-18 TP2	LA-25 TP2	LA-35 TP2			RECOMENDADOS RECOMMENDED	ELIMINADO ELIMINATED	INTRODUCIDO INTRODUCED	NOTAS / NOTES
1	12157588	DISPLAY TP 7"	7" TP DISPLAY	-	-	-	1	1			X			
2	12165732	SOPORTE MAIN BOARD	MAIN BOARD SUPPORT	-	-	-	1	1						
3	12120235	SETA DE EMERGENCIA	EMERGENCY STOP BUTTON	-	-	-	1	1			X			
4	12120238	SOPORTE SETA EMERGENCIA	EMERGENCY STOP SUPPORT	-	-	-	1	1			X			
5	12120237	PULSAD. 250V AC 16A 1VIA 2POS UL	250V AC 16A 1WAY 2POS UL SWITCH	-	-	-	1	1			X			
6	12168823	TARJETA PRINCIPAL TP2	TP2 MAIN BOARD	-	-	-	1	1			X			
7	12133373	CABLE USB MACHO-HEMBRA	USB WIRE MALE-FEMALE	-	-	-	1	1			X			
8	12131829	VARIADOR DELTA PROGRAMADO	PROGRAMMED DELTA INVERTER	-	-	-	1	-			X			
8	12131830	VARIADOR DELTA PROGRAMADO	PROGRAMMED DELTA INVERTER	-	-	-	-	1			X			
9	12041014	CONTACTOR 230V AC 40A 4via UL	230V AC 40A 4via UL CONTACTOR	-	-	-	2	2			X			
10	12024011	CONTACTOR 230V AC 16A 4via UL	230V AC 16A 4via UL CONTACTOR	-	-	-	1	-			X			
10	12024040	CONTACTOR 230V AC 16A 4via UL	230V AC 16A 4via UL CONTACTOR	-	-	-	-	1			X			
11	12121574	MODULO PROCESADOR GRABADO	RECORDED PROCESSOR MODULE	-	-	-	1	1			X			
12	12128262	SENSOR DE PRESION 50mbar	50mbar PRESSURE SENSOR	-	-	-	1	1			X			
13	12024696	MICRORRUPTOR PUERTA	DOOR MICROSWITCH	-	-	-	1	1						
14	12116823	TRANSFORMADOR 1N 50W 240V/12V	1N 50W 240V/12V UL TRANSFORMER	-	-	-	1	1			X			
15	12024515	BORNA TIERRA 35MM	GROUND CONNECTOR 35MM	-	-	-	1	1						
16	12025143	BORNA NEUTRA AZUL 35MM2 1vía UL	BLUE NEUTRAL CONNECTOR 35MM2	-	-	-	1	1						
17	12024628	INTERRUP. 63A 3VIA 2POS SECCI UL	63A 3WAY 2POS ISOLATOR SWITCH	-	-	-	1	1			X			
18	12025158	BORNA PORTAFUSIBLE 6,3A 1 VIA	FUSE HOLDER CONNECTOR 6,3A	-	-	-	2	2						
19	12025180	REGLETA 2 PISOS 24A 2,50MM2 UL	24A 2,5MM2 UL TERMINAL BLOCK	-	-	-	12	12						
20	12024199	TOPE FINAL	END STOP	-	-	-	1	1						
21	12009966	PRENSA ESTOPA DOSIFICACION	DISPENSER STUFFING BOX	-	-	-	1	1						
22	12009927	PRENSA ESTOPA PG-21	STUFFING BOX PG-21	-	-	-	1	-						
22	12009851	PRENSA ESTOPA PG-29 D38	STUFFING BOX PG-29 D38	-	-	-	-	1						
23	12010063	CONTRATUERCA	LOCKNUT	-	-	-	1	-						
23	12009973	CONTRATUERCA	LOCKNUT	-	-	-	-	1						
24	12009994	JUNTA GOMA (GAES)	RUBBER SEAL	-	-	-	1	1						
25	12025278	FILTRO DE JUNTA N-3	JOINT FILTER N-3	-	-	-	3	4						
26	12024996	Te A 90º 3/4	T at 90º 3/4	-	-	-	2	2						
27	12024396	MANGUITO 3/4"	3/4" CONNECTION	-	-	-	1	5						
28	12023921	ELECTROVALVULA 3 VIAS	3 WAY SOLENOID VALVE	-	-	-	1	1			X			
29	12025161	ELECTROVALVULA SIMPLE	SIMPLE SOLENOID VALVE	-	-	-	1	1			X			
30	12023794	ELECTROVALVULA DOBLE	2 WAY SOLENOID VALVE	-	-	-	2	-			X			
30	12023551	ELECTROVALVULA SIMPLE	SIMPLE SOLENOID VALVE	-	-	-	-	3			X			
31	12024622	ELECTROVALVULA SIMPLE	SIMPLE SOLENOID VALVE	-	-	-	-	3			X			
32	12024526	EMPALME	FITTING	-	-	-	-	3						
33	12025062	RACOR PORTA FILTRO 3/4	RACOR FILTER HOLDER 3/4	-	-	-	1	3						
34	12024106	VENTILADOR 230V AC 1N 36KW	FAN 230V AC 1N 36KW	-	-	-	1	1			X			

FAGOR
FAGOR INDUSTRIAL

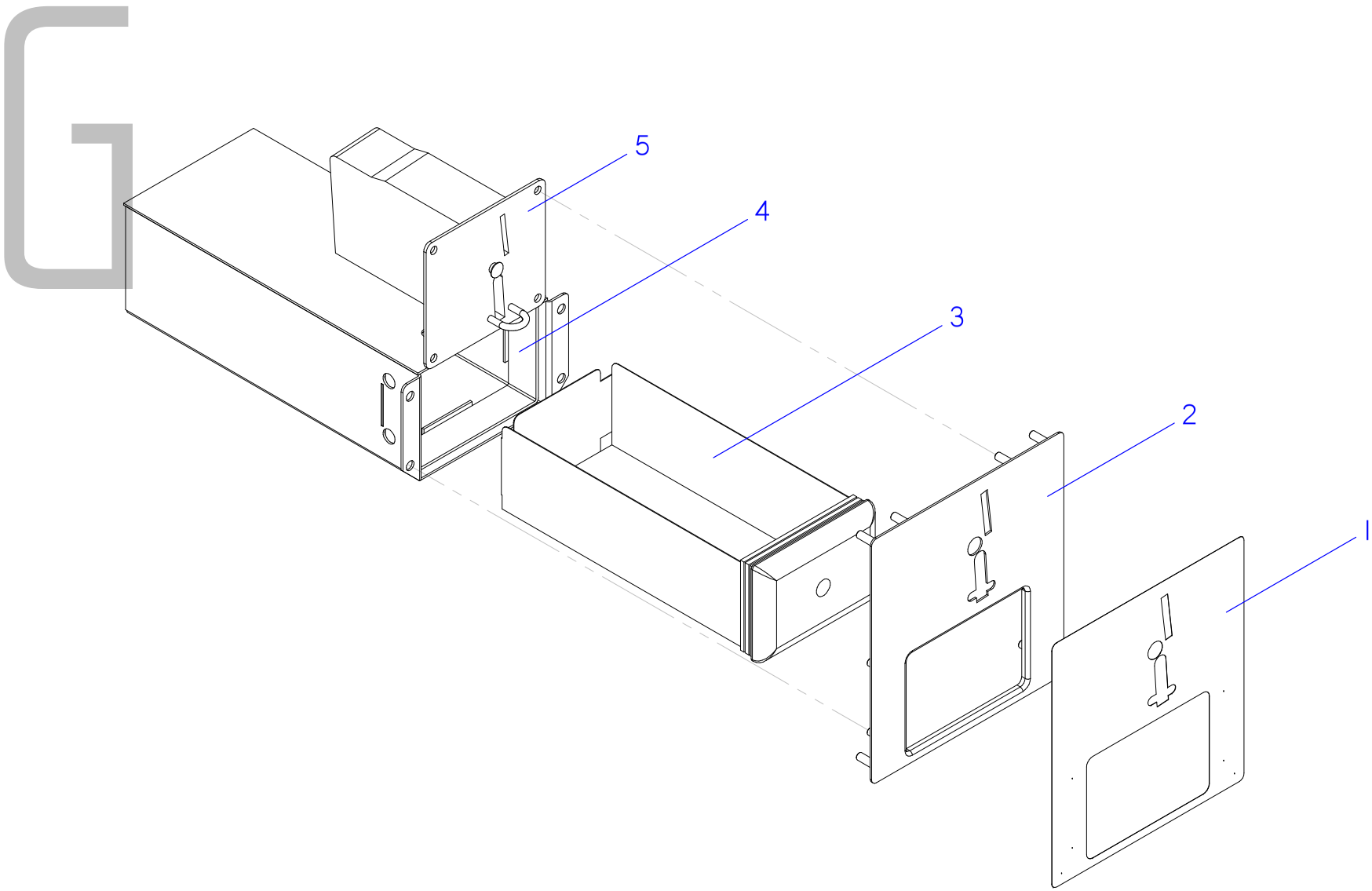

LA_II-35 TP2		
01-2019	KIT MONEDERO / COIN SLOT KIT	18

FAGOR
FAGOR INDUSTRIAL

APARATO / APPLIANCE	LAVADORA / WASHER-EXTRACTOR	ZONA / ZONE	G (KIT MONEDERO / COIN SLOT KIT)

ITEM	REFERENCIA REFERENCE	DENOMINACIÓN	DENOMINATION	LA-11 TP2	LA-14 TP2	LA-18 TP2	LA-25 TP2	LA-35 TP2			RECOMENDADOS RECOMMENDED	ELIMINADO ELIMINATED	INTRODUCIDO INTRODUCED	NOTAS / NOTES
1	12041953	ADHESIVO MONEDERO FAGOR	COIN SLOT ADHESIVE FAGOR	1	1	1	1	1						
2	12130334	CHAPA MONEDERO COMPL.	COIN SLOT PLATE COMPL.	1	1	1	1	1						
3	12023400	CAJA MONEDAS CON LLAVE (XL 8 MONEY	COIN DRAWER (XL 8 MONEY BOX)	1	1	1	1	1						
4	12130337	PORTACAJAS MONEDAS	COIN DRAWER HOLODER.	1	1	1	1	1						
5	12023342	MONEDERO WH (EUR-GBP)	COIN SLOT WH (EUR-GBP)	1	1	1	1	1						
5	12044494	MONEDERO WH (ARS-CLP-BRL)	COIN SLOT WH (ARS-CLP-BRL)	1	1	1	1	1						
5	12044490	MONEDERO WH (AUD-NZD-JPY)	COIN SLOT WH (AUD-NZD-JPY)	1	1	1	1	1						
5	12044488	MONEDERO WH (CNY-TWD-HKD)	COIN SLOT WH (CNY-TWD-HKD)	1	1	1	1	1						
5	12044496	MONEDERO WH (MAD-DZD-TND)	COIN SLOT WH (MAD-DZD-TND)	1	1	1	1	1						
5	12044489	MONEDERO WH (MYR-SGD-IDR) IDR I	COIN SLOT WH (MYR-SGD-IDR) IDR I	1	1	1	1	1						
5	12151342	MONEDERO WH (MYR-SGD-IDR) IDR II	COIN SLOT WH (MYR-SGD-IDR) IDR II	1	1	1	1	1						
5	12044492	MONEDERO WH (RUB-ROB-CZK)	COIN SLOT WH (RUB-ROB-CZK)	1	1	1	1	1						
5	12044491	MONEDERO WH (TRY-PLN)	COIN SLOT WH (TRY-PLN)	1	1	1	1	1						
5	12044487	MONEDERO WH (USD-MXN-CAD)	COIN SLOT WH (USD-MXN-CAD)	1	1	1	1	1						
5	12044493	MONEDERO WH (VEF-PEN-COP)	COIN SLOT WH (VEF-PEN-COP)	1	1	1	1	1						
	12046624	CABLEADO MONEDERO EMP 500	MONEDERO EMP 500 WIRING	1	1	1	1	1						
	19059022	KIT MONEDERO NEGRO EUR+GBP	BLACK COIN SLOT KIT EUR+GBP											
	19059023	KIT MONEDERO NEGRO USA+MEX+CAN	BLACK COIN SLOT KIT USA+MEX+CAN											
	19059024	KIT MONEDERO NEGRO CNY-TWD-HKD	BLACK COIN SLOT KIT CNY-TWD-HKD											
	19059025	KIT MONEDERO NEGRO AUD-NZD-JPY	BLACK COIN SLOT KIT AUD-NZD-JPY											
	19059026	KIT MONEDERO NEGRO TRY-PLN	BLACK COIN SLOT KIT TRY-PLN											
	19059027	KIT MONEDERO NEGRO RUB-ROB-CZK	BLACK COIN SLOT KIT RUB-ROB-CZK											
	19059028	KIT MONEDERO NEGRO MYR-SGD-IDR I	BLACK COIN SLOT KIT MYR-SGD-IDR I											
	19059029	KIT MONEDERO NEGRO ARS-CLP-BRL	BLACK COIN SLOT KIT ARS-CLP-BRL											
	19059030	KIT MONEDERO NEGRO VEF-PEN-COP	BLACK COIN SLOT KIT VEF-PEN-COP											
	19059031	KIT MONEDERO NEGRO MAD-DZD-TND	BLACK COIN SLOT KIT MAD-DZD-TND											
	19059032	KIT MONEDERO NEGRO KRW-PHP-THB	BLACK COIN SLOT KIT KRW-PHP-THB											
	19059033	KIT MONEDERO NEGRO MYR-SGD-IDR II	BLACK COIN SLOT KIT MYR-SGD-IDR II											
	19059034	KIT MONEDERO NEGRO MECÁNICO FICHAS	MECHANIC BLACK COIN SLOT KIT TOKENS											
	19059035	KIT MONEDERO NEGRO MECÁNICO EUR	MECHANIC BLACK COIN SLOT KIT EUR											
	19059735	KIT CENTRAL DE PAGO NEGRO	BLACK PAYMENT CENTRAL KIT											

FAGOR
FAGOR INDUSTRIAL

APARATO / APPLIANCE	LAVADORA / WASHER-EXTRACTOR	ZONA / ZONE	KIT RODAMIENTOS / BEARING KIT

ITEM	REFERENCIA REFERENCE	DENOMINACIÓN	DENOMINATION	LA-11 TP2	LA-14 TP2	LA-18 TP2	LA-25 TP2	LA-35 TP2			RECOMENDADOS RECOMMENDED	ELIMINADO ELIMINATED	INTRODUCIDO INTRODUCED	NOTAS / NOTES
	12038324	KIT RODAMIENTOS	BEARING KIT	1	-	-	-	-						
	12038332	KIT RODAMIENTOS	BEARING KIT	-	1	-	-	-						
	12038336	KIT RODAMIENTOS	BEARING KIT	-	-	1	-	-						
	12012744	KIT RODAMIENTOS	BEARING KIT	-	-	-	1	-						
	12132429	KIT RODAMIENTOS	BEARING KIT	-	-	-	-	1						
	12093440	KIT SOPOPORTE+RODAMIENTOS	SUPPORT+ BEARING KIT	1	-	-	-	-						
	12093442	KIT SOPOPORTE+RODAMIENTOS	SUPPORT+ BEARING KIT	-	1	-	-	-						
	12093443	KIT SOPOPORTE+RODAMIENTOS	SUPPORT+ BEARING KIT	-	-	1	-	-						
	12093446	KIT SOPOPORTE+RODAMIENTOS	SUPPORT+ BEARING KIT	-	-	-	1	-						
	12132430	KIT SOPOPORTE+RODAMIENTOS	SUPPORT+ BEARING KIT	-	-	-	-	1						
	12038340	KIT DESMONTAJE RODAMIENTOS	BEARING DISMANTLING KIT	1	-	-	-	-						
	12038341	KIT DESMONTAJE RODAMIENTOS	BEARING DISMANTLING KIT	-	1	-	-	-						
	12038345	KIT DESMONTAJE RODAMIENTOS	BEARING DISMANTLING KIT	-	-	1	-	-						
	12038346	KIT DESMONTAJE RODAMIENTOS	BEARING DISMANTLING KIT	-	-	-	1	-						
	12125582	KIT DESMONTAJE RODAMIENTOS	BEARING DISMANTLING KIT	-	-	-	-	1						

FAGOR
FAGOR INDUSTRIAL

APARATO / APPLIANCE	LAVADORA / WASHER-EXTRACTOR	ZONA / ZONE	VARIOS / MISCELLANEOUS

ITEM	REFERENCIA REFERENCE	DENOMINACIÓN	DENOMINATION	LA-11 TP2	LA-14 TP2	LA-18 TP2	LA-25 TP2	LA-35 TP2			RECOMENDADOS RECOMMENDED	ELIMINADO ELIMINATED	INTRODUCIDO INTRODUCED	NOTAS / NOTES
	12120261	INSTAL. ELECTRICA 10, 13, 18, 25 UL	ELECT. INSTALLATION 10, 13, 18, 25	1	1	1	1	1						
	12120257	INSTAL. ELECTRICA 35A, 60B UL	ELECT. INSTALLATION 35A, 60B UL	-	-	-	-	-						
	12121936	CABL. CALENTAMIENTO AF 10, 13 UL	HEATING WIRING AF 10, 13 UL	1	1	-	-	-						
	12121907	CABL. CALENTAMIENTO AF 18 KG UL	HEATING WIRING AF 18 KG UL	-	-	1	-	-						
	12121901	CABL. CALENTAMIENTO AF 25 KG UL	HEATING WIRING AF 25 KG UL	-	-	-	1	-						
	12121893	CABL. CALENTAMIENTO AF 35KG UL	HEATING WIRING AF 35 KG UL	-	-	-	-	1						
	12120274	CABLEADO PTC+R UL	PTC+R UL WIRING	1	1	1	1	1			X			
	12120263	CABLEADO VALVULA VACIADO UL	UL DRAIN VALVE WIRING	1	1	1	1	1						
	12121981	CABLEADO PUERTA UL	UL DOOR WIRING	1	1	1	1	1						
	12103432	CABL. CONECTOR MOTOR	ENGINE CONN. WIR.	1	1	1	-	-						
	12044612	CABL. CONECTOR MOTOR	ENGINE CONN. WIR.	-	-	-	1	-						
	12120265	CABL. CONECTOR MOTOR	ENGINE CONN. WIR.	-	-	-	-	1						
	12025067	CABLEADO ELECTR.VALV.VAPOR	STEAM VALVE ELETRIC WIRING	1	1	1	1	1						solo versión a vapor / only steam version
	12120279	CABL. CONECTOR MOTOR 400V	400V ENGINE CONN. WIR.	-	-	-	-	1						
	12136070	CABLEADO E.V. LAV 35 B UL	ELECTROVALVES WIRING 35	-	-	-	-	1						
	12167158	CABLEADO KIT PRESOSTATO	PRESSURE SWITCH WIRING	1	1	1	1	1						

FAGOR
FAGOR INDUSTRIAL

APARATO / APPLIANCE	LAVADORA / WASHER-EXTRACTOR	ZONA / ZONE	RECOMENDADOS / RECOMMENDED

ITEM	REFERENCIA REFERENCE	DENOMINACIÓN	DENOMINATION	LA-11 TP2	LA-14 TP2	LA-18 TP2	LA-25 TP2	LA-35 TP2				ELIMINADO ELIMINATED	INTRODUCIDO INTRODUCED	ZONA / ZONE
15	12166894	ADHESIVO DISPLAY TP2 FAGOR	FAGOR TP2 DISPLAY STICKER	1	1	1	1	1						A (MUEBLE / UNIT)
17	12126497	ADHESIVO ON/OFF NEGRO	BLACK ON/OFF STICKER	1	1	1	1	1						A (MUEBLE / UNIT)
22	12140743	CIERRE COMPLETO UL 205V	UL 205V LOCK	1	1	1	1	1						A (MUEBLE / UNIT)
24	12023284	JUNTA PUERTA	DOOR SEAL	1	1	-	-	-						A (MUEBLE / UNIT)
24	12141203	JUNTA PUERTA	DOOR SEAL	-	-	1	1	-						A (MUEBLE / UNIT)
24	12048069	JUNTA PUERTA	DOOR SEAL	-	-	-	-	1						A (MUEBLE / UNIT)
32	12040850	MICRORRUPTOR 250V AC 16A	250V AC 16A MICRO-SWITCH	1	-	-	-	-						A (MUEBLE / UNIT)
6	12025077	AMORTIGUADOR 120N SUSPA	SUSPA 120N DAMPER	4	-	8	-	-						B (ARMAZÓN / FRAME)
6	12025078	AMORTIGUADOR 90N SUSPA	SUSPA 90N DAMPER	-	8	-	-	-						B (ARMAZÓN / FRAME)
6	12024980	AMORTIGUADOR 140N SUSPA	SUSPA 140N DAMPER	-	-	-	8	12						B (ARMAZÓN / FRAME)
18	12023273	CORREA LF-18	BELT LF-18	1	1	-	-	-						C (TAMBOR / DRUM)
18	12023269	CORREA POLY-V PJ 8 1854	BELT POLY-V PJ 8 1854	-	-	1	-	-						C (TAMBOR / DRUM)
18	12023267	CORREA PJ 1854	BELT PJ 1854	-	-	-	1	-						C (TAMBOR / DRUM)
18	12023252	CORREA POLY-V 12PJ1956	BELT POLY-V 12PJ1956	-	-	-	-	1						C (TAMBOR / DRUM)
18	12153177	CORREA POLY-V 12PJ1956	BELT POLY-V 12PJ1956	-	-	-	-	1						C (TAMBOR / DRUM)
24	12025036	CONJUNTO SONDA 64KOhmio NTC	PROBE 64KOhm NTC	1	1	1	1	1						C (TAMBOR / DRUM)
25	12096597	TERMOSTATO DE SEGURIDAD	SAFETY THERMOSTAT	1	1	1	1	1						C (TAMBOR / DRUM)
26	12096226	RESISTENCIA 2000W 264MM	RESISTANCE 2000W 264MM	3	-	-	-	-						C (TAMBOR / DRUM)
26	12096023	RESISTENCIA 3000W 277MM	RESISTANCE 3000W 277MM	-	3	-	-	-						C (TAMBOR / DRUM)
26	12096051	RESISTENCIA 4000W 347MM	RESISTANCE 4000W 347MM	-	-	3	-	-						C (TAMBOR / DRUM)
26	12041359	RESISTENCIA 6.000W 509MM	RESISTANCE 6.000W 509MM	-	-	-	3	-						C (TAMBOR / DRUM)
26	12092855	RESISTENCIA 7.000W 562MM	RESISTANCE 7.000W 562MM	-	-	-	-	3						C (TAMBOR / DRUM)
28	12023197	MOTOR 230V AC 3 50/60Hz 750W	230V AC 3 50/60Hz 750W ENGINE	1	-	-	-	-						C (TAMBOR / DRUM)
28	12023195	MOTOR 230V AC 3 50/60Hz 1,1kW	230V AC 3 50/60Hz 1,1kW ENGINE	-	1	-	-	-						C (TAMBOR / DRUM)
28	12023194	MOTOR 230V AC 3 50/60Hz 2,2kW	230V AC 3 50/60Hz 2,2kW ENGINE	-	-	1	-	-						C (TAMBOR / DRUM)
28	12172751	MOTOR 230V AC 3 60Hz 4kW	230V AC 3 60Hz 4kW ENGINE	-	-	-	1	-						C (TAMBOR / DRUM)
28	12046405	MOTOR 230V AC 3 50Hz 4kW	230V AC 3 50Hz 4kW ENGINE	-	-	-	-	1						C (TAMBOR / DRUM)
30	12114100	SENSOR MAGNÉTICO 12V	12V MAGNETIC SENSOR	1	1	1	1	1						C (TAMBOR / DRUM)
35	12024477	SENSOR DE DESEQUILINRIO	IMBALANCE SENSOR	-	1	1	1	1						C (TAMBOR / DRUM)
20	12137690	ELECTROV 230V AC 50/50 Hz	230V AC 50/50 Hz ELECTROV	1	1	1	1	1						D (CONJUNTO HIDRÁULICO / HYDRAULIC ASSEMBLY)
29	12023340	VÁLVULA VAPOR 1/2 50/60HZ	STEAM VALVE 1/2 50/60HZ	1	1	1	1	-						D (CONJUNTO HIDRÁULICO / HYDRAULIC ASSEMBLY)
29	12024331	VÁLVULA VAPOR 3/4" 60HZ.	STEAM VALVE 3/4 60HZ	-	-	-	-	1						D (CONJUNTO HIDRÁULICO / HYDRAULIC ASSEMBLY)
1	12157588	DISPLAY TP 7"	7" TP DISPLAY	1	1	1	-	-						E (CUADRO ELÉCTRICO / ELECTRIC BOARD)
3	12120235	SETA DE EMERGENCIA	EMERGENCY STOP BUTTON	1	1	1	-	-						E (CUADRO ELÉCTRICO / ELECTRIC BOARD)
4	12120238	SOPORTE SETA EMERGENCIA	EMERGENCY STOP SUPPORT	1	1	1	-	-						E (CUADRO ELÉCTRICO / ELECTRIC BOARD)
5	12120237	PULSAD. 250V AC 16A 1VIA 2POS UL	250V AC 16A 1WAY 2POS UL SWITCH	1	1	1	-	-						E (CUADRO ELÉCTRICO / ELECTRIC BOARD)
6	12168823	TARJETA PRINCIPAL TP2	TP2 MAIN BOARD	1	1	1	-	-						E (CUADRO ELÉCTRICO / ELECTRIC BOARD)
7	12133373	CABLE USB MACHO-HEMBRA	USB WIRE MALE-FEMALE	1	1	1	-	-						E (CUADRO ELÉCTRICO / ELECTRIC BOARD)
8	12116803	VARIADOR DELTA PROGRAMADO	PROGRAMMED DELTA INVERTER	1	-	-	-	-						E (CUADRO ELÉCTRICO / ELECTRIC BOARD)

APARATO / APPLIANCE	LAVADORA / WASHER-EXTRACTOR	ZONA / ZONE	RECOMENDADOS / RECOMMENDED

ITEM	REFERENCIA REFERENCE	DENOMINACIÓN	DENOMINATION	LA-11 TP2	LA-14 TP2	LA-18 TP2	LA-25 TP2	LA-35 TP2				ELIMINADO ELIMINATED	INTRODUCIDO INTRODUCED	ZONA / ZONE
8	12116804	VARIADOR DELTA PROGRAMADO	PROGRAMMED DELTA INVERTER	-	1	-	-	-						E (CUADRO ELÉCTRICO / ELECTRIC BOARD)
8	12116805	VARIADOR DELTA PROGRAMADO	PROGRAMMED DELTA INVERTER	-	-	1	-	-						E (CUADRO ELÉCTRICO / ELECTRIC BOARD)
9	12024040	CONTACTOR 230V AC 20A 4via UL	230V AC 20A 4via UL CONTACTOR	2	2	2	-	-						E (CUADRO ELÉCTRICO / ELECTRIC BOARD)
10	12024011	CONTACTOR 230V AC 16A 4via UL	230V AC 16A 4via UL CONTACTOR	1	1	1	-	-						E (CUADRO ELÉCTRICO / ELECTRIC BOARD)
11	12121574	MODULO PROCESADOR GRABADO	RECORDED PROCESSOR MODULE	1	1	1	-	-						E (CUADRO ELÉCTRICO / ELECTRIC BOARD)
12	12128262	SENSOR DE PRESION 50mbar	50mbar PRESSURE SENSOR	1	1	1	-	-						E (CUADRO ELÉCTRICO / ELECTRIC BOARD)
14	12116823	TRANSFORMADOR 1N 50W 240V/12V	1N 50W 240V/12V UL TRANSFORMER	1	1	1	-	-						E (CUADRO ELÉCTRICO / ELECTRIC BOARD)
17	12024858	INTERRUP. 32A 3VIA 2POS SECCI UL	32A 3WAY 2POS ISOLATOR SWITCH	1	-	-	-	-						E (CUADRO ELÉCTRICO / ELECTRIC BOARD)
17	12024628	INTERRUP. 63A 3VIA 2POS SECCI UL	63A 3WAY 2POS ISOLATOR SWITCH	-	1	1	-	-						E (CUADRO ELÉCTRICO / ELECTRIC BOARD)
28	12023921	ELECTROVALVULA 3 VIAS	3 WAY SOLENOID VALVE	1	1	1	-	-						E (CUADRO ELÉCTRICO / ELECTRIC BOARD)
29	12025161	ELECTROVALVULA SIMPLE	SIMPLE SOLENOID VALVE	1	1	1	-	-						E (CUADRO ELÉCTRICO / ELECTRIC BOARD)
30	12023794	ELECTROVALVULA 2 VIAS	2 WAY SOLENOID VALVE	2	2	2	-	-						E (CUADRO ELÉCTRICO / ELECTRIC BOARD)
1	12157588	DISPLAY TP 7"	7" TP DISPLAY	-	-	-	1	1						F (CUADRO ELÉCTRICO / ELECTRIC BOARD)
3	12120235	SETA DE EMERGENCIA	EMERGENCY STOP BUTTON	-	-	-	1	1						F (CUADRO ELÉCTRICO / ELECTRIC BOARD)
4	12120238	SOPORTE SETA EMERGENCIA	EMERGENCY STOP SUPPORT	-	-	-	1	1						F (CUADRO ELÉCTRICO / ELECTRIC BOARD)
5	12120237	PULSAD. 250V AC 16A 1VIA 2POS UL	250V AC 16A 1WAY 2POS UL SWITCH	-	-	-	1	1						F (CUADRO ELÉCTRICO / ELECTRIC BOARD)
6	12168823	TARJETA PRINCIPAL TP2	TP2 MAIN BOARD	-	-	-	1	1						F (CUADRO ELÉCTRICO / ELECTRIC BOARD)
7	12133373	CABLE USB MACHO-HEMBRA	USB WIRE MALE-FEMALE	-	-	-	1	1						F (CUADRO ELÉCTRICO / ELECTRIC BOARD)
8	12131829	VARIADOR DELTA PROGRAMADO	PROGRAMMED DELTA INVERTER	-	-	-	1	-						F (CUADRO ELÉCTRICO / ELECTRIC BOARD)
8	12131830	VARIADOR DELTA PROGRAMADO	PROGRAMMED DELTA INVERTER	-	-	-	-	1						F (CUADRO ELÉCTRICO / ELECTRIC BOARD)
9	12041014	CONTACTOR 230V AC 40A 4via UL	230V AC 40A 4via UL CONTACTOR	-	-	-	2	2						F (CUADRO ELÉCTRICO / ELECTRIC BOARD)
10	12024011	CONTACTOR 230V AC 16A 4via UL	230V AC 16A 4via UL CONTACTOR	-	-	-	1	-						F (CUADRO ELÉCTRICO / ELECTRIC BOARD)
10	12024040	CONTACTOR 230V AC 16A 4via UL	230V AC 16A 4via UL CONTACTOR	-	-	-	-	1						F (CUADRO ELÉCTRICO / ELECTRIC BOARD)
11	12121574	MODULO PROCESADOR GRABADO	RECORDED PROCESSOR MODULE	-	-	-	1	1						F (CUADRO ELÉCTRICO / ELECTRIC BOARD)
12	12128262	SENSOR DE PRESION 50mbar	50mbar PRESSURE SENSOR	-	-	-	1	1						F (CUADRO ELÉCTRICO / ELECTRIC BOARD)
14	12116823	TRANSFORMADOR 1N 50W 240V/12V	1N 50W 240V/12V UL TRANSFORMER	-	-	-	1	1						F (CUADRO ELÉCTRICO / ELECTRIC BOARD)
17	12024628	INTERRUP. 63A 3VIA 2POS SECCI UL	63A 3WAY 2POS ISOLATOR SWITCH	-	-	-	1	1						F (CUADRO ELÉCTRICO / ELECTRIC BOARD)
28	12023921	ELECTROVALVULA 3 VIAS	3 WAY SOLENOID VALVE	-	-	-	1	1						F (CUADRO ELÉCTRICO / ELECTRIC BOARD)
29	12025161	ELECTROVALVULA SIMPLE	SIMPLE SOLENOID VALVE	-	-	-	1	1						F (CUADRO ELÉCTRICO / ELECTRIC BOARD)
30	12023794	ELECTROVALVULA DOBLE	2 WAY SOLENOID VALVE	-	-	-	2	-						F (CUADRO ELÉCTRICO / ELECTRIC BOARD)
30	12023551	ELECTROVALVULA SIMPLE	SIMPLE SOLENOID VALVE	-	-	-	-	3						F (CUADRO ELÉCTRICO / ELECTRIC BOARD)
31	12024622	ELECTROVALVULA SIMPLE	SIMPLE SOLENOID VALVE	-	-	-	-	3						F (CUADRO ELÉCTRICO / ELECTRIC BOARD)
34	12024106	VENTILADOR 230V AC 1N 36KW	FAN 230V AC 1N 36KW	-	-	-	1	1						F (CUADRO ELÉCTRICO / ELECTRIC BOARD)
31	12024622	BOBINADO EV SIMPLE	SIMPLE SOLENOID VALVE COIL	-	-	-	3	3						F (CUADRO ELÉCTRICO / ELECTRIC BOARD)
34	12024106	VENTILADOR 230V AC 1N 36KW	FAN 230V AC 1N 36KW	-	-	-	-	1						F (CUADRO ELÉCTRICO / ELECTRIC BOARD)
	12120274	CABLEADO PTC+R UL	PTC+R UL WIRING	1	1	1	1	1						VARIOS / MISCELLANEOUS

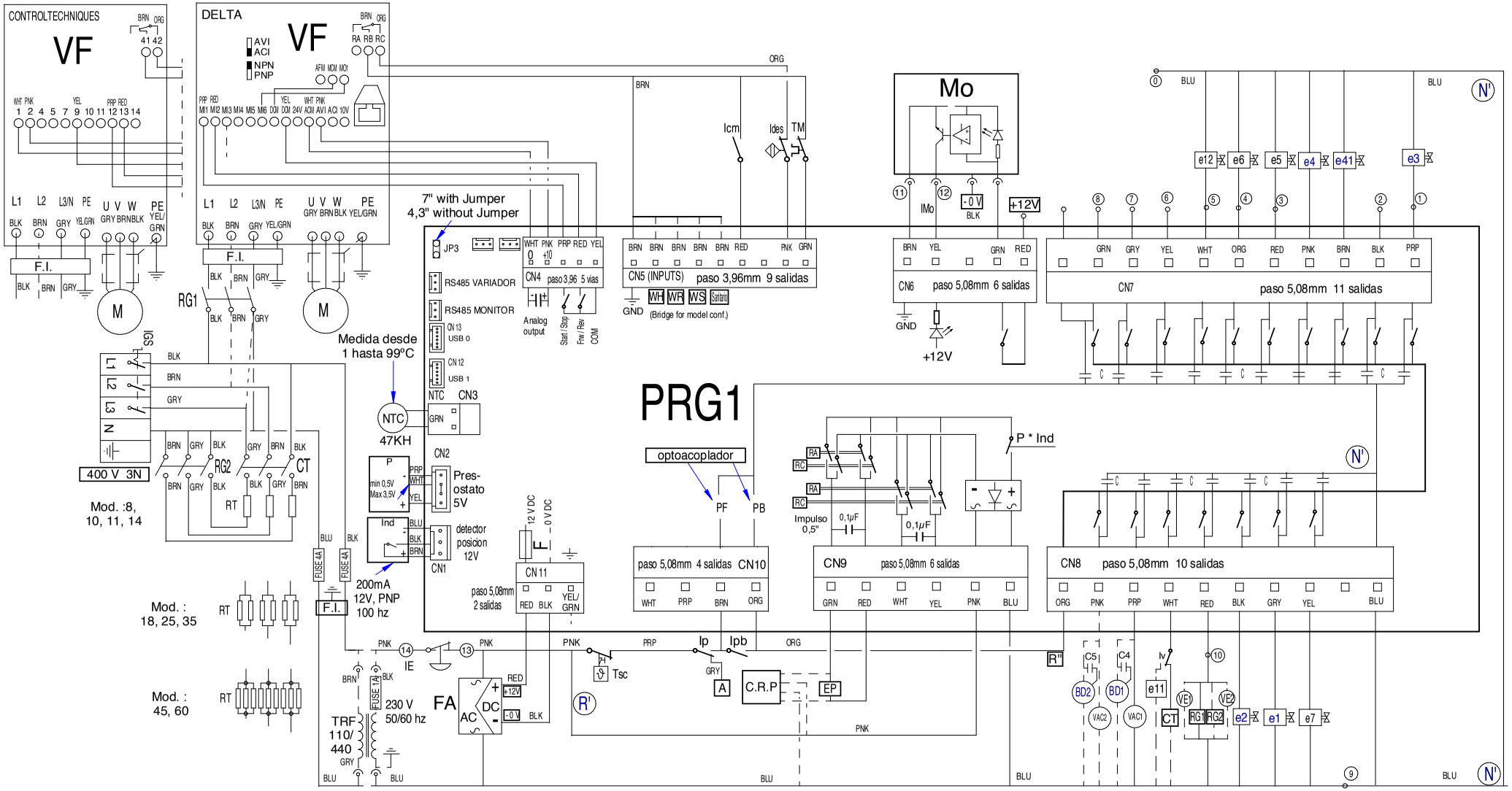

12123442 Rev 02

Simb / LENG		ESPAÑOL	ENGLISH	FRANÇAIS
1 ...8	=	Puntos conexión dosificadores.	Feeder connection points	Points raccordement doseurs
1 , e3	=	Electro válvula Prelavado.	Pre-wash electrically operated valve	Électrovanne Prélavage
2	=	Dosificador Lavado	Wash feeder	Doseur Laver
3 , e5	=	Electro válvula Lejía.	Bleach electrically operated valve.	Électrovanne Eau de Javel
4, e6	=	Electro válvula Suavizante.	Fabric softener electrically operated valve	Electrovanne Assouplissant
5 , e12	=	Dosificador Neutralizante.	Neutralizer feeder	Doseur Neutralisant
6	=	Dosificador jabon liquido.	Liquid soap feeder	Doseur lessive liquide
7 , 8	=	Dosificador aditivos.	Additive feeder	Doseur additifs
9 - 10	=	Lavadora Ocupada	Washer Busy	Laveuse Occupé
11 - 12	=	Entrada moneda	Coin inputs	Entrées Monnaies
CT	=	Contactor Calentamiento	Heating Contactor	Contacteur Chauffe
CRP	=	Circuito Retardo Apertura de Puerta	Delay circuit Door Open	Le circuit de retard d'ouverture de porte
D.T.	=	Display/Teclado	Display/Keyboard	Écran/Clavier
d1, d2, d3	=	Valvula desague hacia tanque exterior	Drain valve to the outside tank	La vanne de vidange à l'extérieur de la cuve
e1	=	Electro válvula agua Fria.	Cold water electrically operated valve	Électrovanne eau Froide
e11	=	Electro válvula Vapor.	Steam electrically operated valve	Électrovanne Vapeur
e2	=	Electro válvula agua Caliente	Hot water electrically operated valve	Électrovanne eau Chaude
e4	=	Electro válvula Lavado agua Fria	Cold water Washing electrically operated valve	Électrovanne lavage à l'eau froide
e41	=	Electro válvula Lavado agua Caliente	Hot water Washing electrically operated valve	Électrovanne lavage à l'eau chaude
e7	=	Electro válvula agua Descalcificada	Delimed water electrically operated valve	Électrovanne eau Adoucie
EB	=	Electro válvula de aire Basculacion Trasera	Air Valve of the Back Tilting	Soupape à air de l'inclinaison arrière
EF	=	Electro válvula de aire Basculacion Frontal	Air Valve of the Front Tilting	Soupape à air de l'inclinaison avant
EP	=	Electroimán de Puerta.	Door electric magnet	Électro-aimant de Porte
et1, et2, et3	=	Electrovalvula llenado procedente de tanque exterior	Solenoid filling from outside Tank	Cuve de remplissage solénoïde de l'extérieur
F	=	Fusible.	Fuse	Fusible
FA	=	Fuente Alimentacion	Power Supply	Source De Courant
FI	=	Filtro de Interferencias.	Interference filter	Filtre Anti-parasites
IB	=	Interruptor Basculacion Trasero del Mando.	Back Tilting Switch of Control	Commutateur de inclinaison arrière de commande
Icm	=	Interruptor de Servicio	Service Switch	Interrupteur de Service
Ides	=	Interruptor de desequilibrio.	Unbalance switch	Interrupteur de balourd
Idrch	=	Interruptor Rotacion a Derechas del Mando	Switch of Spins to the Right of Control	Commutateur des rotations à la droite de la commande
IE	=	Pulsador Parada de emergencia.	Emergency stop push button	Bouton-poussoir Arrêt d'urgence
IF	=	Interruptor Basculacion Frontal Mando.	Front Tilting Switch of Control	Front Tilting Switch of Contrôle
IG	=	Interruptor general.	Power On	Interrupteur général
IGS	=	Interruptor General de seguridad.	Disconnect Switch	interrupteur Général de sécurité
Iizq	=	Interruptor Rotacion a Izquierdas Mando	Switch of Left Spin of Control	Commutateur de rotation gauche de commande
Im	=	Sensor de movimiento	Stopped Motion Switch	Détecteur D'arrêt
Imv	=	Accionamiento de Movimiento / Mando	Drive Motion / Command	Mouvement de route / Command
IMo	=	Interruptor Monedero.	MMO Coin Input	Interrupteur Monnayeur
Ind	=	Sensor Inductivo	Inductive sensor	Capteur inductif
Ip	=	Interruptor puerta Cerrada.	Closed door switch	Interrupteur porte Fermée
Ipb	=	Interruptor puerta bloqueada.	Door lock switch	Interrupteur porte verrouillée
Iremj	=	Interruptor de Remojo del Mando	Soaking Switch of Control	Commutateur de trempage de commande
Iv	=	Interruptor Vapor	Steam Switch	Commutateur de vapeur
M	=	Motor.	Motor	Moteur
MB	=	Interruptor seguridad Basculacion Trasero.	Back Tilting Hi-limit Switch	Interrupteur de sécurité arrière inclinable.
MF	=	Interruptor seguridad Basculacion Frontal.	Front Tilting Hi-limit Switch	Interrupteur de sécurité Frontale inclinable.
Mo	=	Monedero.	coin meter pwr 24vac	Porte-monnaie
NTC	=	Sensor temperatura.	Temperature sensor	Capteur température
P, P2		Presostato Nivel de agua	Water Level Switch	Détecteur de niveau d'eau
PB	=	Presostato Basculacion Trasero	Back Tilting Air Presure Low-Limit	Pressostat inclinaison arrière
PF	=	Presostato Basculacion Frontal	Front Tilting Air Presure Low-Limit	Pressostat inclinaison Frontale
PRG	=	Circuito Programador.	Input/Output Board	Circuit Programmateur
PTC	=	PTC	PTC	PTC
R	=	Resistencia Homica	Ohmic resistance	Résistance ohmique
RG1, RG2	=	Contactor General	General Contactor	Contacteur général
Rm	=	Rele movimiento / Parada	Stopped Motion Relay	Relais Détecteur D'arrêt
Rmo	=	Rele de Monedero	Coin meter relay	Relais de Porte-monnaie
Rp	=	Rele puerta Cerrada.	Closed door Relay	Relais porte Fermée
Rpb	=	Rele puerta bloqueada.	Door lock Relay	Relais porte verrouillée
RT	=	Resistencia Calentamiento.	Heating Elements	Résistance Chauffe
Tm	=	Térmico de Motor.	Motor Thermal Overload	Thermique du Moteur
Trf	=	Transformador	Transformer	Transformateur
Trf s/N	=	Transformador Versión sin Neutro.	Transformer Version without Neutral	Transformateur Version sans Neutre
Tsc	=	Termostato seguridad calentamiento	Hi-limit Thermostat	Thermostat Limiteur
VAC1, VAC2	=	Válvula Vaciado	Drain Valve	Vanne Vidange
VE, VE1, VE2	=	Ventilador.	Fan	Ventilateur
VF	=	Convertidor de Frecuencia.	Variable Frequency Drive	Convertisseur de Fréquence
VM	=	Ventilador Motor.	Fan motor	Ventilateur Moteur
COLOR	=	COLORES	COLOUR	COULEURS
BLK, bk, n	=	Negro	Black	Noir
BLU, bl, a	=	Azul	Blue	Bleu
BRN, bn, m	=	Marrón	Brown	Marron
GRN, gn, ve	=	Verde	Green	Vert
GRY, gy, g	=	Gris	Grey	Gris
ORG, or, na	=	Naranja	Orange	Orange
PNK, pk, rs	=	Rosa	Pink	Rose
PRP, pr, vi	=	Violeta	Purple	Violet
RED, rd, r	=	Rojo	Red	Rouge
WHT, wh, b	=	Blanco	White	Blanc
YEL, yw, am	=	Amarillo	Yellow	Jaune
YEL/GRN, am/ve	=	Amarillo/verde	Yellow / green	Jaune / vert
			L 41, L43	***12023075***