DESPIECE TECNICO

Lavavajillas de capota
Lave-vaisselle d' capot
Pass-through dishwasher
Durchschub geschirrspüler
Lavastoviglie a cappuccio
Lava-louças de capota

Modelos:

AD-90
AD-90 DD
AD-90 B A
AD-90 B BT
AD-90 B DD

Diciembre 2009 December

Revisado Junio 2011 June Revised

FAGOR

FAGOR INDUSTRIAL

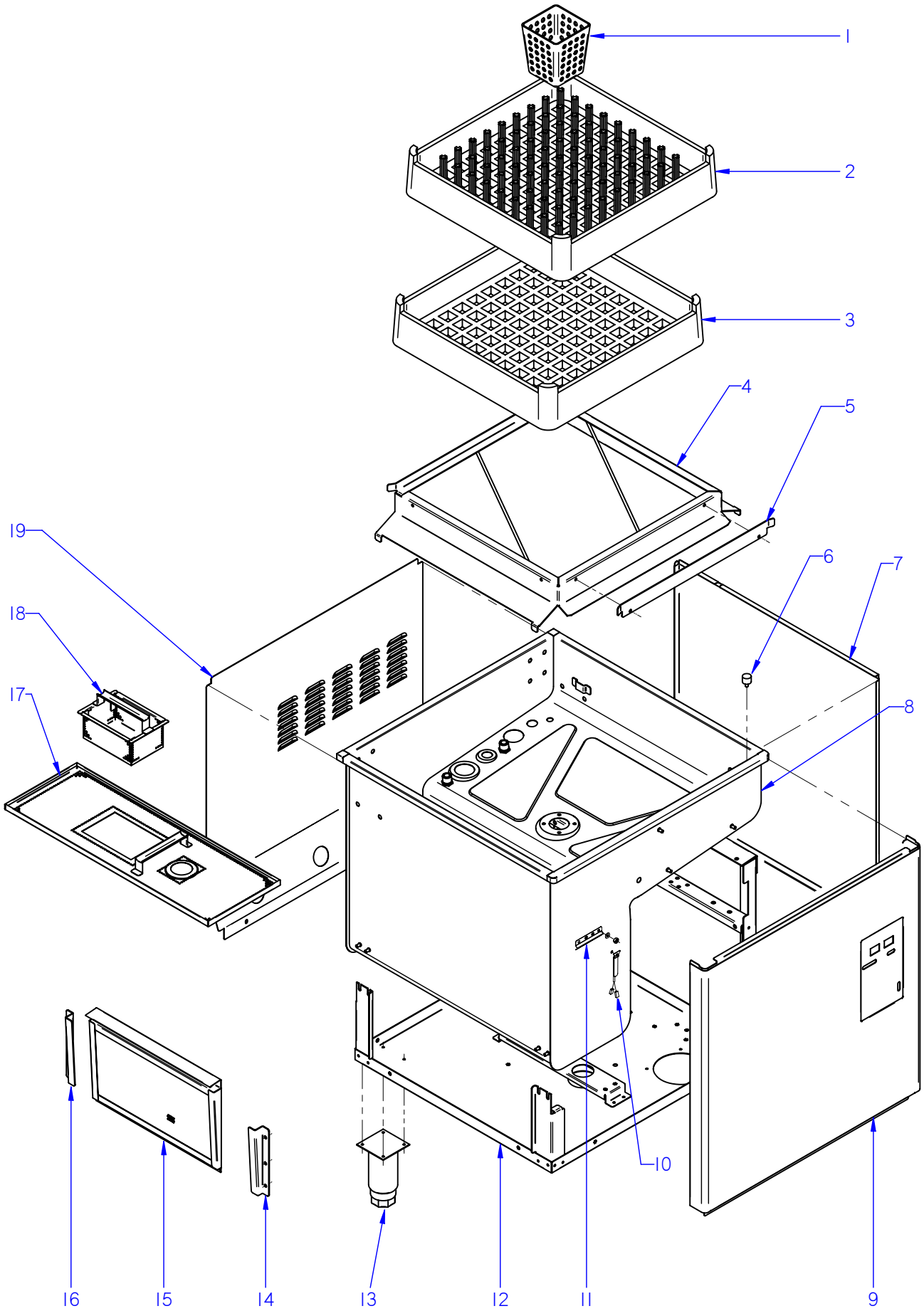

ITEM MARCADO EN COLOR = REPUESTO RECOMENDADO
COLOURED ITEM = RECOMMENDED SPARE PART

N plano	Firma	Fecha	Aparato	Lamina	
C-2493		2009-12	MUEBLE LAVAVAJILLAS AD-90	1	Fagor Industrial S.Coop. FAGOR Oñate

MOD.	LAVAVAJILLAS DE CAPOTA PASS THROUGH DISHWASHER	ZONA	MUEBLE / FITTING	PLANO	C-2493

ITEM	CODIGO	DENOMINACION	TEXTO	AD-90	AD-90 DD	AD-90 B A	AD-90 B BT	AD-90 B DD			NOTAS
1	Z655314000	CESTILLO CUBIERTOS	CUTLERY BASKET	2	2	2	2	2			
2	Z655302000	CESTILLO PLATOS CP-16-18	PLATE BASKET CP-16-18	1	1	1	1	1			
3	Z655301000	CESTILLO BASE CT-10	BASE BASKET CT-10	1	1	1	1	1			
4	Z710377000	BASE CESTILLO COMPLETA	COMPLETE BASKET BASE	1	1	1	1	1			
5	Z710326000	GUIA CESTILLO	BASKET GUIDE	1	1	1	1	1			
	Q152004000	TORNILLO APLAST. M5x13 A304	MUSHROOM HEAD BOLT M5x13 A	2	2	2	2	2			
	Q242030000	ARANDELA ABANICO A5 A.304	FAN WASHER A5 A.304	2	2	2	2	2			
	Q162030000	TUERCA EXAGONAL M5	HEXAGONAL NUT M5	2	2	2	2	2			
	Q308000000	ARANDELA DUBO A.8	DUBO A.8 WASHER	14	14	14	14	14			
6	Z710316000	AMORTIGUADOR	DAMPER	2	2	2	2	2			
	Q262040000	ARANDELA GROW. A6 A.304	WASHER GROW. A6 A.304	2	2	2	2	2			
	Q162040000	TUERCA EXAGONAL M6	HEXAGONAL NUT M6	2	2	2	2	2			
	Q012073000	TORNILLO EXAGONAL M12x20	HEXAGONAL BOLT M12x20	1	1	1	1	1			
	Q306024000	JUNTA 18x12.2x1.5	SEAL 18x12.2x1.5	1	1	1	1	1			
	Q162070000	TUERCA EXAGONAL M12	HEXAGONAL NUT M12	1	1	1	1	1			
7	Z749311000	PANEL LATERAL DERECHO	RIGHT SIDE PANEL	1	1	1	1	1			
	Q152004000	TORNILLO APLAST. M5x13 A304	MUSHROOM HEAD BOLT M5x13 A	2	2	2	2	2			
S/Nº	Z749312000	PANEL LATERAL IZQUIERDO	LEFT SIDE PANEL	1	1	1	1	1			
	Q152004000	TORNILLO APLAST. M5x13 A304	MUSHROOM HEAD BOLT M5x13 A	2	2	2	2	2			
8	Z710379000	CUBA COMPLETA AD-80	COMPLETE TUB AD-80	1	1	1	1	1			ELIMINADO 06.07.10
8	Z740311000	CUBA COMPLETA AD-90	COMPLETE TUB AD-90	1	1	1	_	1			INTRODUCIDO 06.07.10
8	Z748907000	CUBA COMPLETA AD-90	COMPLETE TUB AD-90	_	_	_	1	_			
	Q232040000	ARANDELA A6	WASHER A6	4	4	4	4	4			
	Q302022000	ARANDELA 16x6x1.2 A.304	WASHER 16X6X1.2 A.304	4	4	4	4	4			
	Q262040000	ARANDELA GROW. A6 A.304	WASHER GROW. A6 A.304	8	8	8	8	8			
	Q162040000	TUERCA EXAGONAL M6	HEXAGONAL NUT M6	8	8	8	8	8			
9	Z712937000	PANEL FRONTAL AD-80-100-120	FRONT PANEL AD-80-100-120	1	1	1	1	1			
10	Z713028000	SONDAS TEMPERATURA GICAR	GICAR TEMPERATURE GAUGE	1	1	1	1	1			
S/Nº	Z718004000	AMARRE SONDA	PROBE FASTENING	1	1	1	1	1			
	Q242020000	ARANDELA ABANICO A.4 A304	FAN WASHER A.4 A304	1	1	1	1	1			
	Q162020000	TUERCA EXAGONAL M4	HEXAGONAL NUT M4	1	1	1	1	1			

MOD.	LAVAVAJILLAS DE CAPOTA PASS THROUGH DISHWASHER	ZONA	MUEBLE / FITTING	PLANO	C-2493

ITEM	CODIGO	DENOMINACION	TEXTO	AD-90	AD-90 DD	AD-90 B A	AD-90 B BT	AD-90 B DD			NOTAS
11	Z748008000	SOPORTE BULBO TERMOSTATO	THERMOSTAT BULB SUPPORT	1	1	1	1	1			
	Q162040000	TUERCA EXAGONAL M6	HEXAGONAL NUT M6	2	2	2	2	2			
	Q232040000	ARANDELA A6	WASHER A6	2	2	2	2	2			
	Q262040000	ARANDELA GROW. A6 A.304	WASHER GROW. A6 A.304	2	2	2	2	2			
12	Z749303000	ARMAZON COMPLETO	COMPLETE FRAME	1	1	1	_	1			
12	Z718921000	ARMAZON COMPLETO	COMPLETE FRAME	_	_	_	1	_			
13	X260151000	PATA REGULABLE	ADJUSTABLE LEG	4	4	4	4	4			
	Q411304000	REMACHE AVIBULB Ø4,8	AVIBULB RIVET Ø4.8	16	16	16	16	16			
14	Z710309000	GUIA FILTRO ANTERIOR	FRONT FILTER GUIDE	1	1	1	1	1			
	Q232040000	ARANDELA A6	WASHER A6	2	2	2	2	2			
	Q162040000	TUERCA EXAGONAL M6	HEXAGONAL NUT M6	2	2	2	2	2			
15	Z710907000	FILTRO COMPLETO	COMPLETE FILTER	1	1	1	1	1			
16	Z710310000	GUIA FILTRO POSTERIOR	REAR FILTER GUIDE	1	1	1	1	1			
	Q232040000	ARANDELA A6	WASHER A6	2	2	2	2	2			
	Q162040000	TUERCA EXAGONAL M6	HEXAGONAL NUT M6	2	2	2	2	2			
17	Z710801000	BANDEJA COMPLETA	COMPLETE TRAY	1	1	1	1	1			
18	Z710804000	RECOGEDOR DESPERDICIOS	WASTE COLLECTION	1	1	1	1	1			
19	Z742905000	PANEL POSTERIOR FI-80	REAR PANEL FI-80	1	1	1	1	1			
	3713500000	PERFIL CUBREARISTAS PLASTICO	PLASTIC EDGE COVER PROFILE	3	3	3	3	3			
	Q152004000	TORNIL, APLASTADO M5x13 A304	FLAT HEADED BOLT M5x13 A304	2	2	2	2	2			
	Z712911000	TOPE 80x80x20	BUFFER 80x80x20	6	6	6	6	6			
S/Nº	Z206135000	CHECK LIST LAVAVAJILLAS FAGOR	CHECK LIST	1	1	1	1	1			INTRODUCIDO 19.07.10

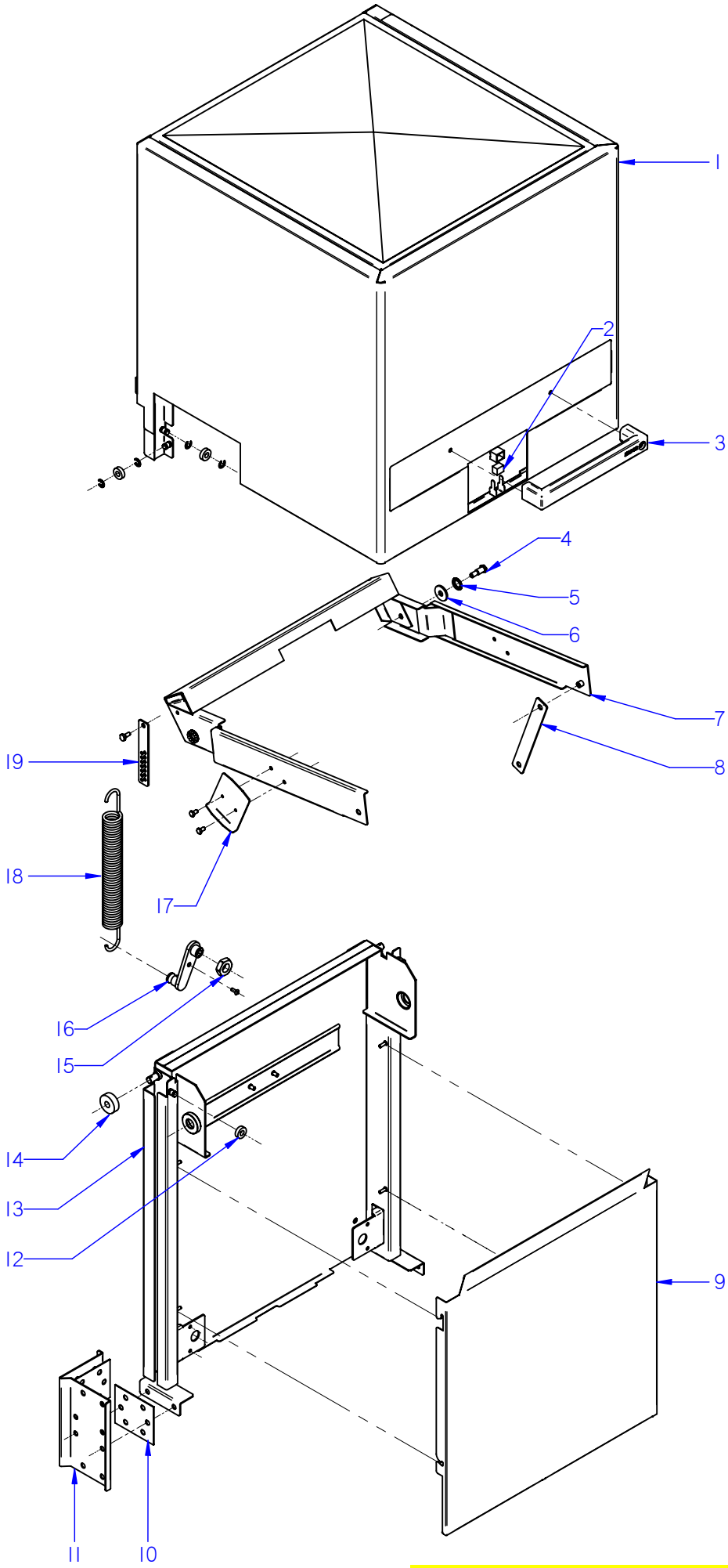

ITEM MARCADO EN COLOR = REPUESTO RECOMENDADO
COLOURED ITEM = RECOMMENDED SPARE PART

N plano	Firma	Fecha	Aparato	CAPO	Lamina	
C-2494		2009-12	LAVAVAJILLAS AD-90		2	Fagor Industrial S.Coop. FAGOR Oñate

MOD.	LAVAVAJILLAS DE CAPOTA PASS THROUGH DISHWASHER	ZONA	CAPO / HOOD	PLANO	C-2494

ITEM	CODIGO	DENOMINACION	TEXTO	AD-90	AD-90 DD	AD-90 B A	AD-90 B BT	AD-90 B DD			NOTAS
1	Z740505000	CAPO RECTO COMPLETO	COMPLETE STRAIGHT HOOD	1	1	1	1	1			
	Z710515000	CASQUILLO RODANTE	REVOLVING BUSHING	4	4	4	4	4			
	Q271006000	ARANDELA DE SEGURIDAD 8	SAFETY WASHER 8	8	8	8	8	8			
2	Z200506000	IMAN	MAGNET	1	1	1	1	1			
S/Nº	Z200507000	PROTECTOR IMAN	MAGNET PROTECTOR	1	1	1	1	1			
3	Z710558000	ASA CAPOTA AD	AD HOOD HANDLE	1	1	1	1	1			
	Q032041000	TORNILLO ALOMADO M6x10	CURVED SCREW M6x10	2	2	2	2	2			
	Q308002000	ARANDELA DUBO A6 NYLON	WASHER DUBO A6 NYLON	2	2	2	2	2			
4	Z710542000	EJE DE GIRO	ROTARY SHAFT	2	2	2	2	2			
5	Z710541000	RODAMIENTO 6200-2RS1	BEARING 6200-2RS1	2	2	2	2	2			
6	Q308012000	ARANDELA 30x10x3	WASHER 30x10x3	2	2	2	2	2			
7	Z710517000	BALANCIN COMPLETO	COMPLETE ROCKER ARM	1	1	1	1	1			
	Q232050000	ARANDELA A8	WASHER A8	2	2	2	2	2			
	Q262050000	ARANDELA GROW. A8 A.304	WASHER GROW. A8 A.304	2	2	2	2	2			
	Q162050000	TUERCA EXAGONAL M8x1 INOX.	HEXAGONAL NUT M8x1 INOX.	2	2	2	2	2			
8	Z710523000	BIELA	ROD	2	2	2	2	2			
	Q308012000	ARANDELA 30x10x3	WASHER 30x10x3	8	8	8	8	8			
	Q232040000	ARANDELA A6	WASHER A6	4	4	4	4	4			
	Q262040000	ARANDELA GROW. A6 A.304	WASHER GROW. A6 A.304	4	4	4	4	4			
	Q012041000	TORNILLO EXAGON. M6x10 A.304	HEXAGONAL BOLT. M6x10 A.304	4	4	4	4	4			
9	Z718932000	CUBIERTA RESORTES CLINIC	SPRING COVER	1	1	1	1	1			
10	Z710547000	JUNTA SOPORTE CAPO	HOOD SUPPORT SEAL	4	4	4	4	4			
	Q012053000	TORNILLO EXAGON. M8x20 A.304	HEXAGONAL BOLT. M8x20 A.304	10	10	10	10	10			
	Q013153000	TORNILLO EX M-8x20 LATON CRO.	HEX BOLT M-8x20 CHR. BRASS	4	4	4	4	4			
	Q232050000	ARANDELA A8	WASHER A8	14	14	14	14	14			
	Q262050000	ARANDELA GROW. A8 A.304	WASHER GROW. A8 A.304	14	14	14	14	14			
	Q162050000	TUERCA EXAG. M8x1 INOX.	HEXAG. SCREW M8x1 STAINLES	10	10	10	10	10			
11	Z710539000	SOPORTE GUIA CAPO	HOOD GUIDE SUPPORT	2	2	2	2	2			
12	Z710515000	CASQUILLO RODANTE	REVOLVING BUSHING	2	2	2	2	2			
	Q271006000	ARANDELA DE SEGURIDAD 8	SAFETY WASHER 8	4	4	4	4	4			

MOD.	LAVAVAJILLAS DE CAPOTA PASS THROUGH DISHWASHER	ZONA	CAPO / HOOD	PLANO	C-2494

ITEM	CODIGO	DENOMINACION	TEXTO	AD-90	AD-90 DD	AD-90 B A	AD-90 B BT	AD-90 B DD			NOTAS
13	Z710524000	GUIA CAPO COMPLETA	COMPLETE HOOD GUIDE	1	1	1	1	1			
	Q352024000	PASADOR DE ALETA 4x25	WING PIN 4x25	2	2	2	2	2			
14	Z710546000	CASQUILLO	BUSHING	2	2	2	2	2			
15	Q222016000	TUERCA EXAGONAL M20	HEXAGONAL BOLT M20	2	2	2	2	2			
16	Z710529000	TENSOR MUELLE	TENSIONING SPRING	2	2	2	2	2			
	Q152004000	TORNILLO APLAST. M5x13 A 304	MUSHROOM HEAD BOLT M5x13	2	2	2	2	2			
17	Z710548000	ESCUADRA TOPE	BUFFER BRACKET	2	2	2	2	2			
	Q012041000	TORNILLO EXAGON. M6X10 A.304	HEXAGONAL BOLT. M6X10 A.304	4	4	4	4	4			
	Q242040000	ARANDELA ABANICO	FAN WASHER	4	4	4	4	4			
18	Z710528000	RESORTE 29230	SPRING 29230	2	2	2	2	2			
19	Z710543000	ENGANCHE MUELLE	SPRING HOOK	2	2	2	2	2			
	Z710544000	EJE ENGANCHE MUELLE	SPRING HOOK SHAFT	2	2	2	2	2			
	Q232040000	ARANDELA A6	WASHER A6	2	2	2	2	2			
	Q222012000	TUERCA AUTOB. M6	SELF-LOCK NUT M6	2	2	2	2	2			

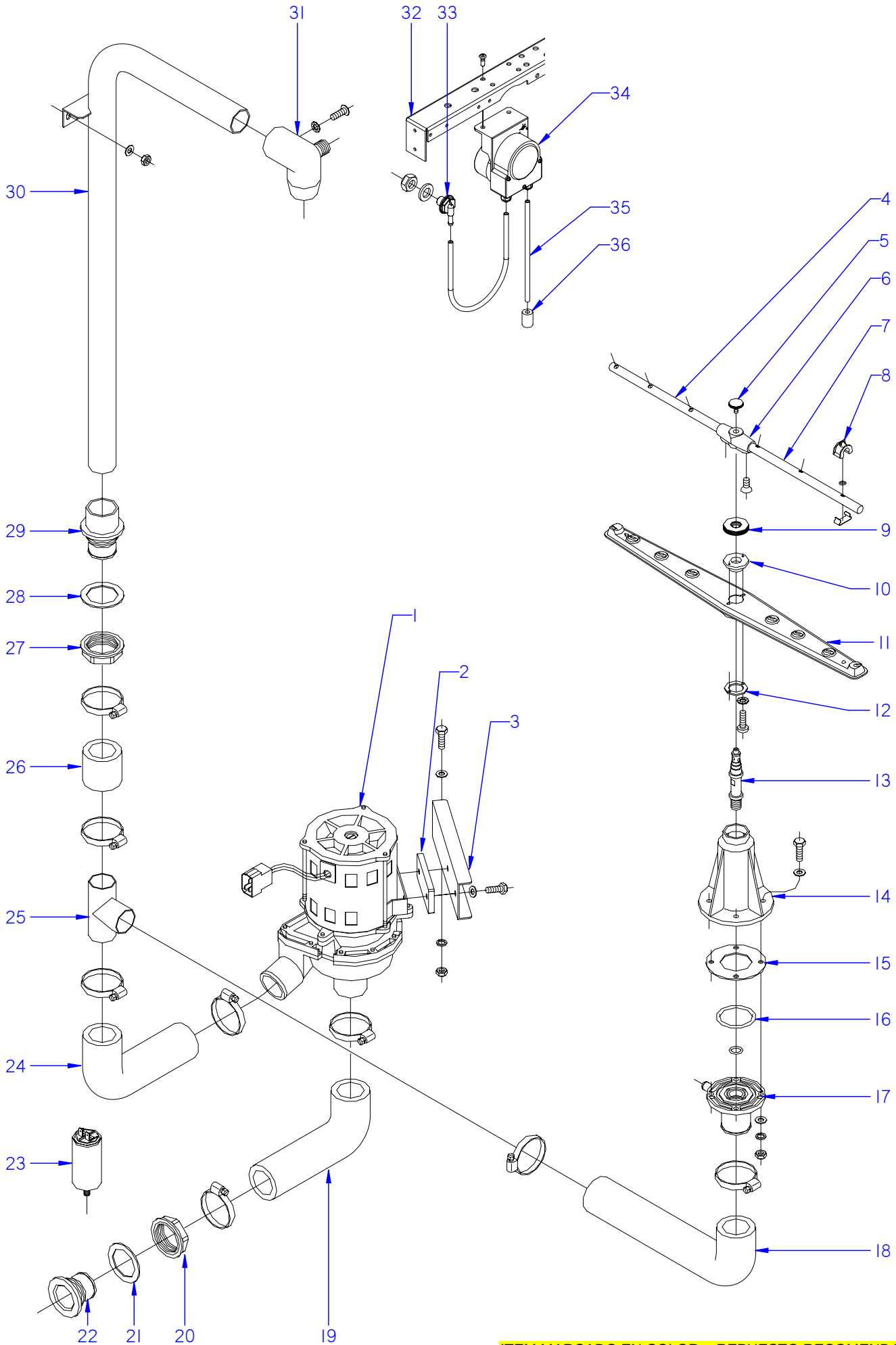

ITEM MARCADO EN COLOR = REPUESTO RECOMENDADO
COLOURED ITEM = RECOMMENDED SPARE PART

N plano	Firma	Fecha	Aparato	CONJUNTO FUNCIONAL LAVADO	Lamina	
C-2495		2009-12	LAVAVAJILLAS AD-90		3	Fagor Industrial S.Coop. FAGOR Oñate

MOD.	LAVAVAJILLAS DE CAPOTA PASS THROUGH DISHWASHER	ZONA	PARTE FUNCIONAL LAVADO WASH FUNCTIONAL PART	PLANO	C-2495

ITEM	CODIGO	DENOMINACION	TEXTO	AD-90	AD-90 DD	AD-90 B A	AD-90 B BT	AD-90 B DD			NOTAS
1	Z201011000	BOMBA DE LAVADO	WASH PUMP	1	1	1	1	1			
	Z201082000	TURBINA PARA 50 HZ.88 MM	TURBINE 50 HZ.88 MM	1	1	1	1	1			
	Z201081000	CONJUNTO JUNTA Y RETEN	JOINT BOARD AND SEAL	1	1	1	1	1			
1	Z203511000	BOMBA DE LAVADO 60 HZ.	WASH PUMP 60 Hz.	1	1	1	_	1			
	Z201083000	TURBINA 60 HZ.78 MM	TURBINE 60 HZ.78 MM	1	1	1	_	1			
	Z201081000	CONJUNTO JUNTA Y RETEN	JOINT BOARD AND SEAL	1	1	1	_	1			
2	Z201003000	BASE BOMBA LAVADO 1003016	WASH PUMP BASE 1003016	1	1	1	1	1			
	Q232040000	ARANDELA A6	WASHER A6	2	2	2	2	2			
	Q012042000	TORNILLO EXAGONAL M6x15	HEXAGONAL BOLT M6x15	2	2	2	2	2			
3	Z711002000	SOPORTE MOTOBOMBA POSTER.	REAR MOTOR PUMP SUPPORT	1	1	1	1	1			
4	Z208712000	RAMA ACLARADO IZQUIERDA	LEFT RINSE BRANCH	2	2	2	2	2			ELIMINADO 21.12.10
4	Z201902000	RAMA ACLARADO IZQUIERDA	LEFT RINSE BRANCH	2	2	2	2	2			INTRODUCIDO 21.12.10
5	Q152016000	TORNILLO ESPECIAL M.5x0.8	SPECIAL BOLT M.5X0.8	2	2	2	2	2			
6	Z201903000	SOPORTE RAMA ACLARADO COM.	COM. RINSE BRANCH SUPPORT	2	2	2	2	2			
	Q042021000	TORNILLO AVELLAN. M4x10 A304	COUNTERSUNK BOLT M4x10 A30	4	4	4	4	4			
7	Z208713000	RAMA ACLARADO DERECHA	RIGHT RINSE BRANCH	2	2	2	2	2			ELIMINADO 21.12.10
7	Z201901000	RAMA ACLARADO DERECHA	RIGHT RINSE BRANCH	2	2	2	2	2			INTRODUCIDO 21.12.10
8	Z201905000	TOBERA ACLARADO	RINSE NOZZLE	_	_	_	12	_			
8	Z201905000	TOBERA ACLARADO	RINSE NOZZLE	12	12	12	_	12			ELIMINADO 21.12.10
8	Z211903000	TOBERA ACLARADO	RINSE NOZZLE	12	12	12	_	12			INTRODUCIDO 21.12.10
	Q307036000	JUNTA TORICA 5,25X8,84X1,78	O-RING 5,25X8,84X1,78	12	12	12	_	12			ELIMINADO 21.12.10
	Z201906000	ENGANCHE TOBERA	ANCHORAGE NOZZLE	12	12	12	_	12			ELIMINADO 21.12.10
9	Z200705000	TUERCA ESPECIAL	SPECIAL NUT	2	2	2	2	2			
10	Z650704000	ENGANCHE DISTRIBUIDOR	DISTRIBUTOR ANCHORAGE	2	2	2	2	2			
11	Z650716000	DISTRIBUIDOR COMPLETO	COMPLETE DISTRIBUTOR	2	2	2	2	2			
12	Z650711000	AMARRE ENGANCHE DISTRIBUID.	ANCHORAGE DISTRIBUTOR	2	2	2	2	2			
	Q032011000	TORNILLO ALOMADO M3x10	CURVED SCREW M3X10	4	4	4	4	4			
	Q242010000	ARANDELA ABANICO A3 A.304	FAN WASHER A3 A.304	4	4	4	4	4			
13	Z200704000	EJE CENTRAL	CENTRAL SHAFT	2	2	2	2	2			
14	Z740705000	SOPORTE DISTRIBUIDOR INFER.	LOWER DISTRIBUTION SUPPOR	1	1	1	1	1			
15	Z710714000	JUNTA DE GOMA	RUBBER SEAL	1	1	1	1	1			

MOD.	LAVAVAJILLAS DE CAPOTA PASS THROUGH DISHWASHER	ZONA	PARTE FUNCIONAL LAVADO WASH FUNCTIONAL PART	PLANO	C-2495

ITEM	CODIGO	DENOMINACION	TEXTO	AD-90	AD-90 DD	AD-90B A	AD-90 B BT	AD-90 B DD			NOTAS
16	Q307057000	JUNTA TORICA 47.22x54.28x3.53	O-RING 47.22x54.28x3.53	1	1	1	1	1			
	Q307050000	JUNTA TORICA 13.94x19.18x2.6	O-RING 13.94x19.18x2.6	1	1	1	1	1			
17	Z710706000	PASAMUROS	BUSHING	1	1	1	1				
	Q012044000	TORNILLO EXAGONAL M6x25	HEXAGONAL BOLT M6x25	4	4	4	4				
	Q306050000	ARANDELA 6x12x1.5	WASHER 6x12x1.5	4	4	4	4				
	Q232040000	ARANDELA A6	WASHER A6	4	4	4	4				
	Q262040000	ARANDELA GROW. A6 A.304	WASHER GROW. A6 A.304	4	4	4	4				
	Q162040000	TUERCA EXAGONAL M6	HEXAGONAL NUT M6	4	4	4	4				
18	Z740903000	CONDUCTO INFERERIOR	LOWER PIPE	1	1	1	_				
18	Z710906000	CONDUCTO INFERERIOR POSTER.	BACK LOWER PIPE	_	_	_	1				
19	Z710904000	CONDUCTO ASPIRACION	EXTRACTOR PIPE	1	1	1	1				
	Q881307000	ABRAZADERA 40-60	CLAMP 40-60	4	4	4	4				
20	Z710708000	TUERCA PASAMUROS	WALL BUSHING NUT	1	1	1	1				
21	Q307058000	ARANDELA 60x44x2	WASHER 60x44x2	1	1	1	1				
22	Z710903000	PASAMUROS ASPIRACION	EXTRACTOR BUSHING	1	1	1	1				
23	V321300000	CONDENSADOR 10 M,F,	CONDENSER 10 M,F,	1	1	1	1				
	Q162050000	TUERCA EXAGONAL M8x1 INOX,	HEXAGONAL NUT M8x1 INOX.	2	2	2	2				
24	Z740901000	CONDUCTO IMPULSION	IMPULSE PIPE	1	1	1	_				
24	Z710905000	CONDUCTO IMPULSION ANTERIOR	BEFORE IMPULSE PIPE	_	_	_	1				
	Q881307000	ABRAZADERA 40-60	CLAMP 40-60	2	2	2	2				
25	Z740905000	TE IMPULSION	IMPULSE T	1	1	1	_				
26	Z740902000	CONDUCTO SUPERIOR	UPPER PIPE	1	1	1	_				
	Q881307000	ABRAZADERA 40-60	CLAMP 40-60	2	2	2	_				
27	Z710708000	TUERCA PASAMUROS	WALL BUSHING NUT	1	1	1	1				
28	Q307058000	ARANDELA 60x44x2	WASHER 60x44x2	1	1	1	1				
29	Z740701000	PASAMUROS ARBOL LAVADO	WASH CAM BUSHING	1	1	1	_				
39	Z330790000	PASAMUROS IMPULSION PRELAV.	PREWASH IMPULSE BUSHING	_	_	_	1				
30	Z710709000	ARBOL LAVADO COMPLETO	COMPLETE WASH CAM	1	1	1	1				
	Q232040000	ARANDELA A6	WASHER A6	2	2	2	2				
	Q162040000	TUERCA EXAGONAL M6	HEXAGONAL NUT M6	2	2	2	2				

MOD.	LAVAVAJILLAS DE CAPOTA PASS THROUGH DISHWASHER	ZONA	PARTE FUNCIONAL LAVADO WASH FUNCTIONAL PART	PLANO	C-2495

ITEM	CODIGO	DENOMINACION	TEXTO	AD-90	AD-90 DD	AD-90 B A	AD-90 B BT	AD-90 B DD			NOTAS
31	Z740703000	SOPORTE DISTRIBUIDOR SUPER.	UPPER DISTRIBUTION SUPPORT	1	1	1	1	1			
	Q152004000	TORNILLO APLAST. M5x13 A.304	MUSHROOM HEAD BOLT M5x13 A	1	1	1	1	1			
	Q242030000	ARANDELA ABANICO A5 A.304	FAN WASHER A5 A.304	1	1	1	1	1			
32	---------	TRAVESAÑO		_	1	_	1	1			
33	Z230905000	PASAMUROS DETERGENTE	INOX DETERGENT WALL BUSHIN	_	1	_	1	1			ELIMINADO 30.11.10
33	Z208927000	PASAMUROS DETERGENTE INOX	DETERGENT WALL BUSHING	_	1	_	1	1			INTRODUCIDO 30.11.10
S/Nº	3699300000	CONDUCTO DOSIFICAFOR TRANS.	DOSEFOR CONDUIT	_	1	_	1	1			
34	Z208903000	DOSIFIC. DGTE REGULABLE G300	DOSEFOR DETERGENT	_	1	_	_	1			
34	Z208915000	DOSIFICADOR DGTE ABRILLANT.	DETERGENT DISPENSER RINS.	_	_	_	1	_			
35	Z448614000	CONDUCTO ASPIRACIÓN	CONDUIT	_	1	_	_	1			
35	Z448618000	CONDUCTO ABRILLANTADOR	POLISH DUCT	_	_	_	1	_			
36	Z701152000	PESO FILTRO		_	1	_	1	1			

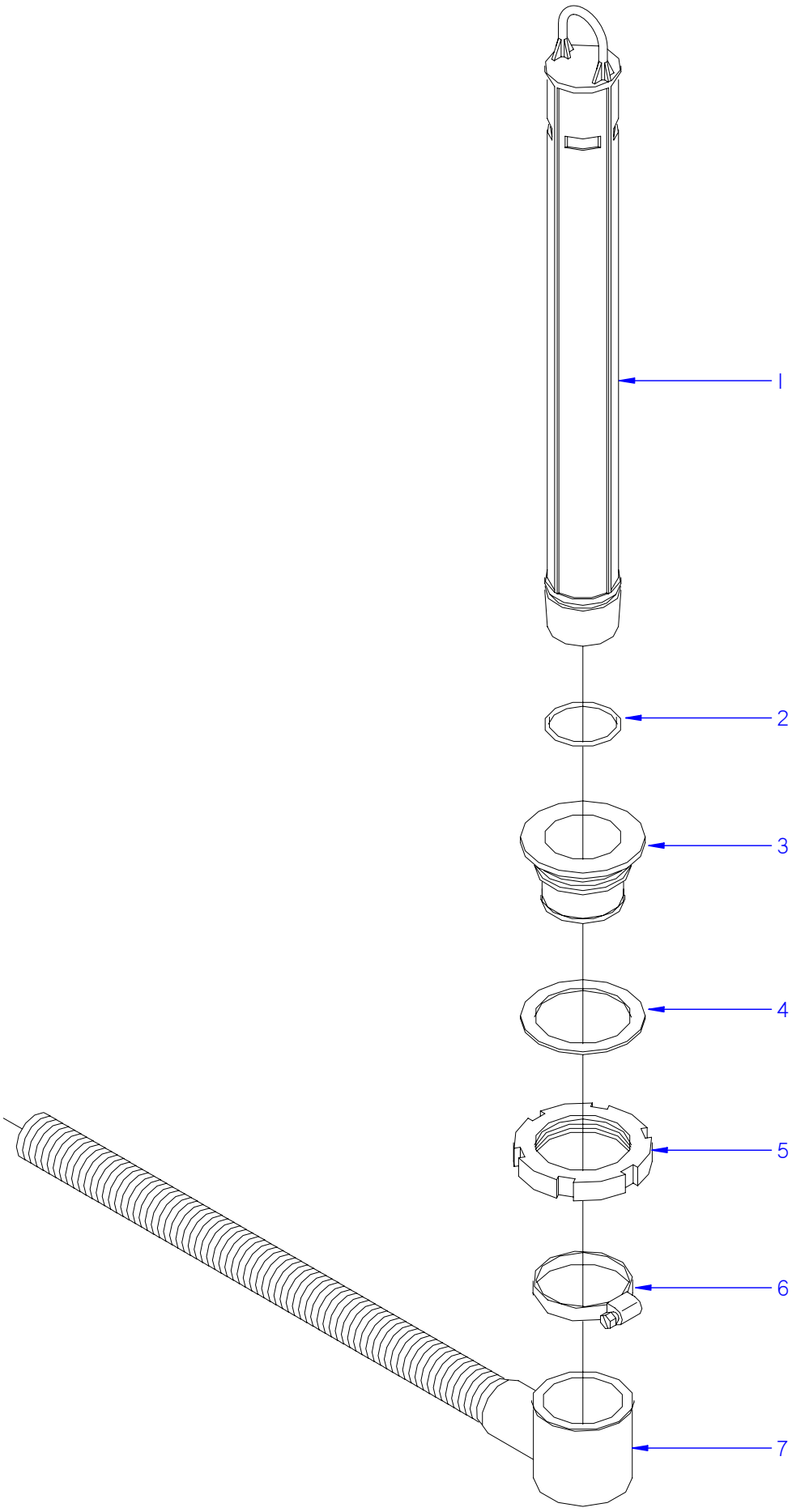

ITEM MARCADO EN COLOR = REPUESTO RECOMENDADO
COLOURED ITEM = RECOMMENDED SPARE PART

N plano	Firma	Fecha	Aparato	CONJUNTO FUNCIONAL DESAGUE	Lamina	
C-2496		2009-12	LAVAVAJILLAS AD-90 / AD-90 DD		4	Fagor Industrial S.Coop. FAGOR Oñate

MOD.	LAVAVAJILLAS DE CAPOTA PASS THROUGH DISHWASHER	ZONA	PARTE FUNCIONAL DESAGÜE DRAINAGE FUNCTIONAL PART	PLANO	C-2496

ITEM	CODIGO	DENOMINACION	TEXTO	AD-90	AD-90 DD						NOTAS
1	Z710901000	ALIVIADERO	OVERFLOW	1	1						
2	Q307051000	JUNTA TOR.36.17X41.41X2.6	O-RING 36.17X41.41X2.6	1	1						
3	Z710902000	PASAMUROS DESAGUE	DRAINAGE BUSHING	1	1						
4	Q307059000	JUNTA 72x56x2	SEAL 72x56x2	1	1						
5	Q220001000	TUERCA RANURADA	GROOVED NUT	1	1						
6	Q881307000	ABRAZADERA 40-60	CLAMP 40-60	1	1						
7	Z200910000	MANGUERA DESAGUE	DRAINAGE HOSE	1	1						

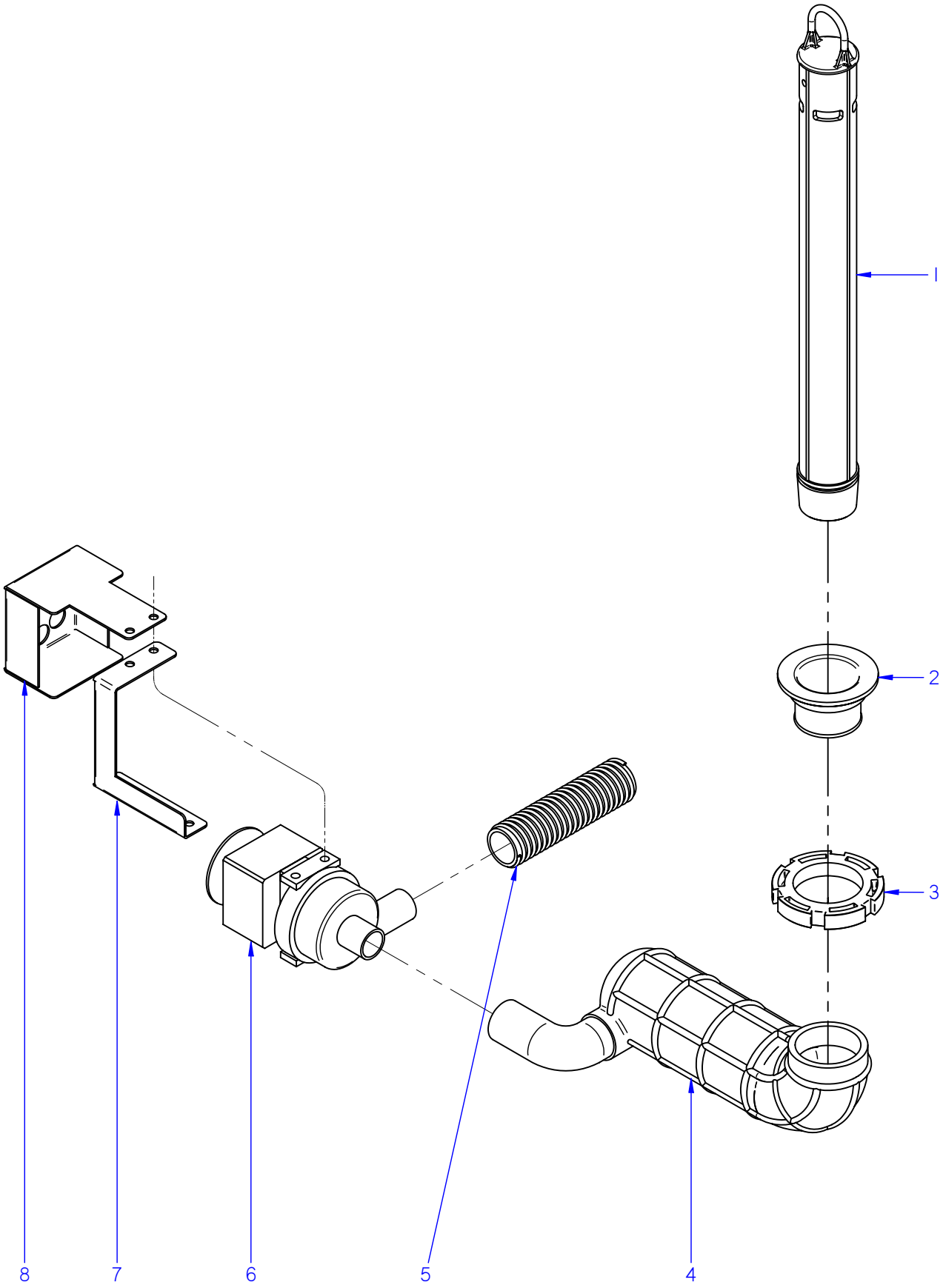

ITEM MARCADO EN COLOR = REPUESTO RECOMENDADO
COLOURED ITEM = RECOMMENDED SPARE PART

N plano	Firma	Fecha	Aparato	PARTE FUNCIONAL DESAGUE	Lamina	
C-2496a		2009-12	LAVAVAJILLAS AD-90 B A; B BT; BDD		4a	Fagor Industrial S.Coop. FAGOR Oñate

MOD.	LAVAVAJILLAS DE CAPOTA PASS THROUGH DISHWASHER	ZONA / ZONE	PARTE FUNCIONAL DESAGÜE DRAINAGE FUNCTIONAL PART	PLANO DIAGRAM	C-2496a

ITEM	CODIGO CODE	DENOMINACION	NAME	AD-90 B A	AD-90 B BT	AD-90 B DD					NOTAS
1	Z710901000	ALIVIADERO	OVERFLOW	1	1	1					
	Q307051000	JUNTA TORICA 36.17x41.41x2.6	O-RING 36.17x41.41x2.6	1	1	1					
2	Z710902000	PASAMUROS DESAGUE	DRAINAGE BUSHING	1	1	1					
	Q307059000	ARANDELA 72x56x2	WASHER 72x56x2	1	1	1					
3	Q220001000	TUERCA RANURADA	GROOVED NUT	1	1	1					
4	Z711004000	ACUMULADOR CAPOTA	HOOD ACCUMULATOR	1	1	1					
	Q881304000	ABRAZADERA 20-32	CLAMP 20-32	2	2	2					
5	Z220903000	MANGUERA DESAGUE	DRAINAGE HOSE	1	1	1					
	Q881307000	ABRAZADERA 40-60	CLAMP 40-60	1	1	1					
6	Z711007000	BOMBA DESAGUE	DRAINAGE PUMP	1	1	1					
	Q262040000	ARANDELA GROW. A6 A.304	WASHER GROW. A6 A.304	4	4	4					
	Q012042000	TORNILLO EXAGONAL M6x15	HEXAGONAL BOLT M6x15	4	4	4					
	Q032032000	TORNILLO ALOMADO M5x15	CURVED SCREW M5X15	2	2	2					
	Q242030000	ARANDELA ABANICO A5 A.304	FAN WASHER A5 A.304	2	2	2					
7	Z711005000	SOPORTE MOTOBOMBA	MOTOR PUMP SUPPORT	1	1	1					
8	Z711006000	PROTECCION BOMBA	PUMP PROTECTION	1	1	1					

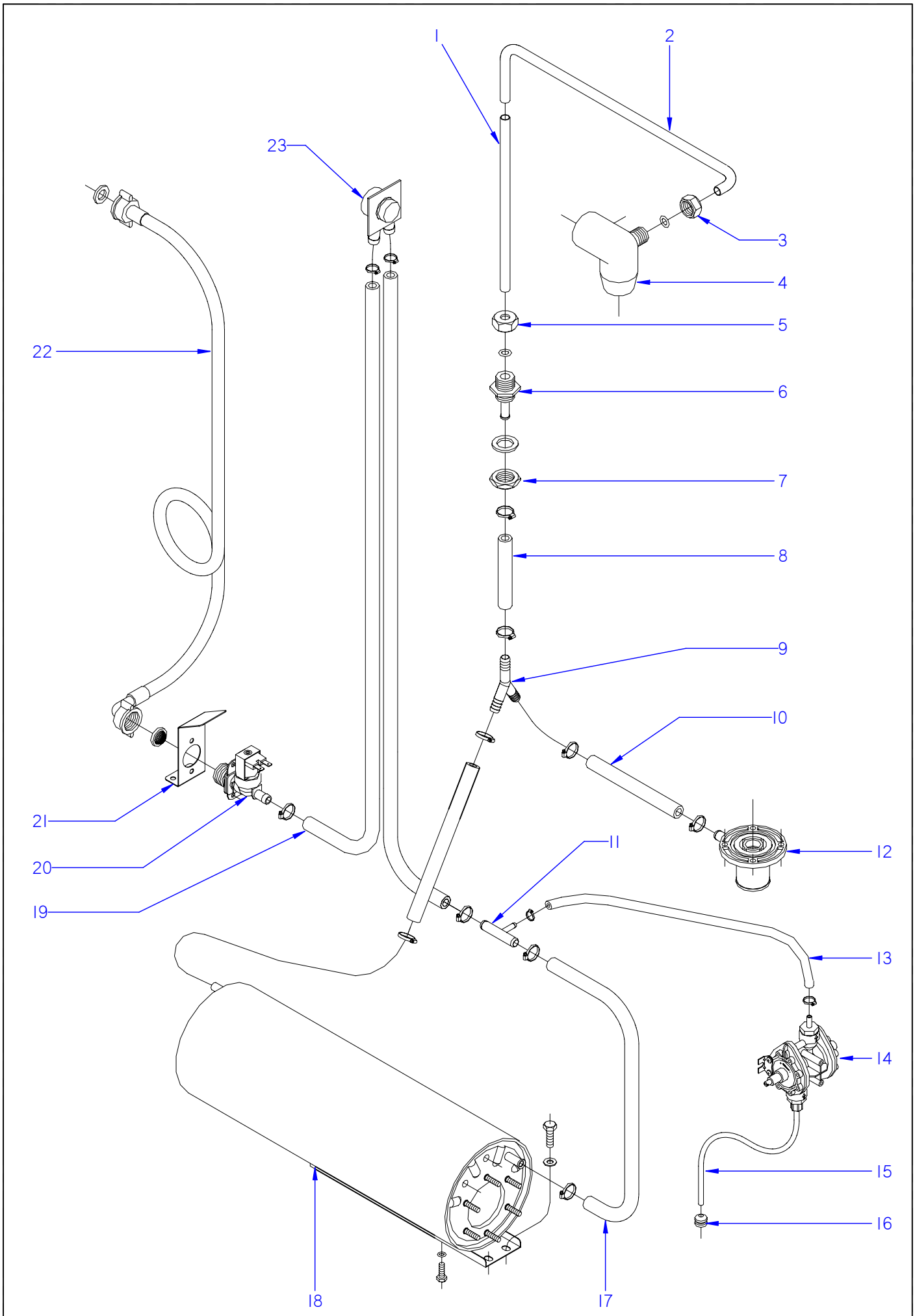

ITEM MARCADO EN COLOR = REPUESTO RECOMENDADO
COLOURED ITEM = RECOMMENDED SPARE PART

N plano	Firma	Fecha	Aparato	CONJUNTO FUNCIONAL ACLARADO	Lamina	
C-2497		2009-12	LAVAVAJILL. AD-90; DD; B A; B DD		5	Fagor Industrial S.Coop. FAGOR Oñate

MOD.	LAVAVAJILLAS DE CAPOTA PASS THROUGH DISHWASHER	ZONA	PARTE FUNCIONAL ACLARADO RINSE FUNCTIONAL PART	PLANO	C-2497

ITEM	CODIGO	DENOMINACION	TEXTO	AD-90	AD-90 DD	AD-90 B A	AD-90 B DD				NOTAS
1	Z711114000	TUBO EMPALME	CONNECTION PIPE	2	2	2	2				
2	Z711903000	CONDUCCION ACLARADO COMP.	COMP. RINSE PIPE	1	1	1	1				
3	Q223107000	TUERCA M.20x2.5	NUT M.20X2.5	1	1	1	1				
	Q307048000	JUNTA TORICA Ø9.12X16.18X3.53	O-RING Ø9.12X16.18X3.53	1	1	1	1				
4	Z740703000	SOPORTE DISTRIBUIDOR SUPER.	UPPER DISTRIBUTION SUPPORT	1	1	1	1				
	Q152004000	TORNILLO APLAST. M5x13 A.304	MUSHROOM HEAD BOLT M5x13 A	1	1	1	1				
	Q242030000	ARANDELA ABANICO A5 A.304	FAN WASHER A5 A.304	1	1	1	1				
5	Q223107000	TUERCA M.20x2.5	NUT M.20X2.5	1	1	1	1				
	Q307048000	JUNTA TORICA Ø9.12X16.18X3.53	O-RING Ø9.12X16.18X3.53	1	1	1	1				
6	Z711904000	PASAMUROS ACLARADO	RINSE BUSHING	1	1	1	1				
	Q307032000	JUNTA Ø 32X21X3	SEAL Ø 32X21X3	1	1	1	1				
7	Q223023000	TUERCA EXAGONAL 5-8 LATON	HEX NUT 5-8 BRASS	2	2	2	2				
8	3676900000	TUBO GOMA NEGRA Ø 17*10	BLACK RUBBER PIPE 17*10	1	1	1	1				
	Q881302000	ABRAZADERA 12-20	CLAMP 12-20	2	2	2	2				
9	Z201106000	RACORD EN Y	Y-CONNECTION	1	1	1	1				
10	3676900000	TUBO GOMA NEGRA Ø 17*10	BLACK RUBBER PIPE 17*10	2	2	2	2				
	Q881302000	ABRAZADERA 12-20	CLAMP 12-20	4	4	4	4				
11	Z601157000	TOMA PRESION	PRESSURE INTAKE	1	1	1	1				
12	Z710706000	PASAMUROS	BUSHING	1	1	1	1				
	Q012044000	TORNILLO EXAGONAL M6x25	HEXAGONAL BOLT M6x25	4	4	4	4				
	Q306050000	ARANDELA 6x12x1.5	WASHER 6x12x1.5	4	4	4	4				
	Q232040000	ARANDELA A6	WASHER A6	4	4	4	4				
	Q262040000	ARANDELA GROW. A6 A.304	WASHER GROW. A6 A.304	4	4	4	4				
	Q162040000	TUERCA EXAGONAL M6	HEXAGONAL NUT M6	4	4	4	4				
13	3704000000	TUBO GOMA NEGRO D 10,5*5	BLACK RUBBER PIPE Ø 10.5*5	1	1	1	1				
	Q881308000	ABRAZADERA 8-14L	CLAMP 8-14L	2	2	2	2				
14	Z211109000	DOSIFICADOR TENSOACTIVO N-6	SURFACE ACT. DISP. N-6	1	1	1	1				
	Q232030000	ARANDELA A5	WASHER A5	2	2	2	2				
	Q012031000	TORNIL. EXAGONAL M5x10 A.304	HEXAGONAL BOLT M5X10 A.304	4	4	4	4				
	Q163020000	TUERCA EXAGONAL M4 LATON	HEXAGONAL NUT M4 BRASS	2	2	2	2				
15	Z448618000	CONDUCTO ABRILLANTADOR	RINSE AID PIPE	1	1	1	1				

MOD.	LAVAVAJILLAS DE CAPOTA PASS THROUGH DISHWASHER	ZONA	PARTE FUNCIONAL ACLARADO RINSE FUNCTIONAL PART	PLANO	C-2497

ITEM	CODIGO	DENOMINACION	TEXTO	AD-90	AD-90 DD	AD-90 B A	AD-90 B DD				NOTAS
16	Z701152000	PESO FILTRO	FILTER WEIGHT	1	1	1	1				
17	3676900000	TUBO GOMA NEGRA Ø 17*10	BLACK RUBBER PIPE 17*10	1	1	1	1				
	Q881302000	ABRAZADERA 12-20	CLAMP 12-20	2	2	2	2				
18	Z201710000	CALDERIN COMPLETO	COMPLETE DRUM	1	1	1	1				
	Q012031000	TORNIL. EXAGONAL M5x10 A.304	HEXAGONAL BOLT M5X10 A.304	2	2	2	2				
	Q232030000	ARANDELA A5	WASHER A5	2	2	2	2				
	Q012063000	TORNIL. EXAGONAL M10x20 A.304	HEXAGONAL BOLT M10X20 A.304	1	1	1	1				
	Q307048000	JUNTA TORICA Ø9.12X16.18X3.53	O-RING Ø9.12X16.18X3.53	1	1	1	1				
19	3676900000	TUBO GOMA NEGRA Ø 17*10	BLACK RUBBER PIPE 17*10	2	2	2	2				
	Q881302000	ABRAZADERA 12-20	CLAMP 12-20	4	4	4	4				
20	Z701135000	ELECTR. SIMP.220V COD.255.208	SOLENOID VALVE SIMP.220V CO	1	1	1	1				
21	Z201101000	ESCUADRA AMARRE ELECTROVA	SOLENOID VALVE BRACKET	1	1	1	1				
	Q152024000	TORN. AVELLANADO M4x8 A.304	HEXAGONAL COUNTERSUNK M4	2	2	2	2				
	Q242020000	ARANDELA ABANICO A4 A.304	FAN WASHER A4 A.304	2	2	2	2				
	Q012031000	TORNIL. EXAGONAL M5x10 A.304	HEXAGONAL BOLT M5X10 A.304	2	2	2	2				
	Q232030000	ARANDELA A5	WASHER A5	2	2	2	2				
22	Z602121000	MANGUERA ENTRADA AGUA	WATER INTAKE HOSE	1	1	1	1				
23	Z231106000	VALVULA ANTIRRETORNO	NON-RETURN VALVE	1	1	1	1				
	Q881302000	ABRAZADERA 12/20	CLAMP 12/20	2	2	2	2				
S/Nº	Z711113000	SOPORTE VALVULA A.R.	VALVE SUPPORT A.R.	1	1	1	1				

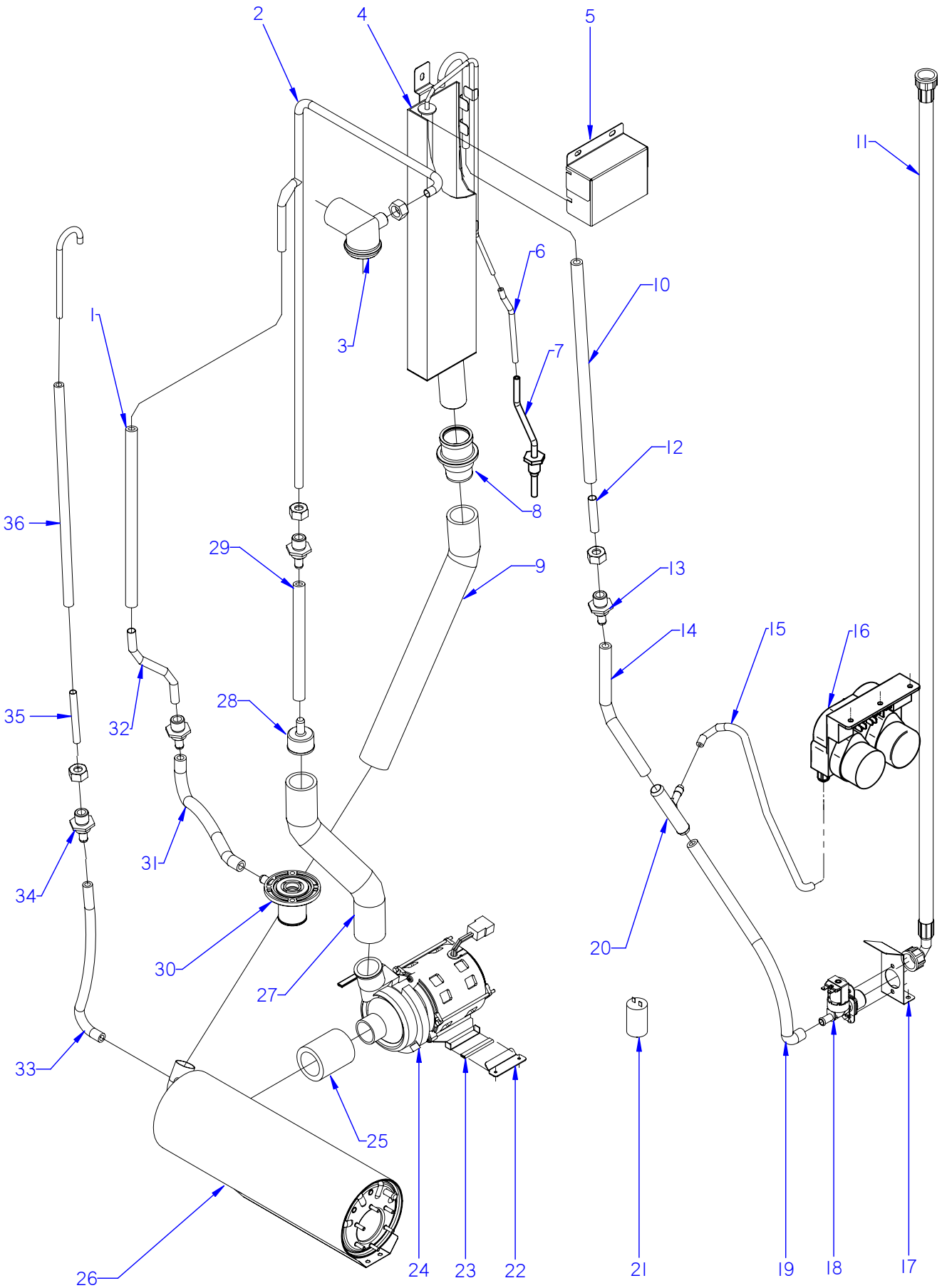

ITEM MARCADO EN COLOR = REPUESTO RECOMENDADO
COLOURED ITEM = RECOMMENDED SPARE PART

N plano	Firma	Fecha	Aparato		Lamina	
C-2497a		2011-06	CONJUNTO FUNCIONAL ACLARADO LAVAVAJILLAS AD-90 B BT		5a	Fagor Industrial S.Coop. FAGOR Oñate

MOD.	LAVAVAJILLAS DE CAPOTA PASS THROUGH DISHWASHER	ZONA / ZONE	PARTE FUNCIONAL ACLARADO RINSE FUNCTIONAL PART	PLANO DIAGRAM	C-2497a

ITEM	CODIGO CODE	DENOMINACION	NAME	AD-90 B BT							NOTAS
1	3676900000	TUBO GOMA NEGRA Ø 17*10	BLACK RUBBER PIPE 17*10	1							
	Q881302000	ABRAZADERA 12-20	CLAMP 12-20	2							
2	Z718911000	RAMA DE ACLARADO CLINIC	RINSE BRANCH	1							
3	Z740703000	SOPORTE DISTRIBUIDOR SUPER.	UPPER DISTRIBUTION SUPPORT	1							
4	Z727412000	DEPOSITO CLINIC COMPLETO	CLINIC FULL TANK	1							
5	Z727413000	TAPA DEPOSITO CLINIC	CLINIC TANK TOP	1							
	Q262040000	ARANDELA GROW. A6 A.304	WASHER GROW. A6 A.304	3							
	Q162040000	TUERCA EXAGONAL M6	HEXAGONAL NUT M6	3							
6	3702400000	TUBO DE GOMA Ø 8*4 x140	RUBBER PIPE Ø 8*4 x140	1							
	P102154000	BRIDA ELASTICA TUBO	ELASTIC PIPE FLANGE	2							
7	Z727407000	PASAMUROS PRES. CLINIC	CLINIC BUSHING	1							
	Q306024000	JUNTA 18x12.5x1.5	SEAL 18x12.5x1.5	1							
8	Z330790000	PASAMUROS IMPULSION PRELAV.	PREWASH IMPULSE BUSHING	1							
	Z710708000	TUERCA PASAMUROS	BUSHING NUT	1							
	Q307058000	ARANDELA 60x44x2	WASHER 60x44x2	1							
	Q307065000	JUNTA TORICA 43,01x37,77x2,62	O-RING 43,01x37,77x2,62	1							
	Q881307000	ABRAZADERA 40*60	CLAMP 40*60	1							
9	Z718925000	CONDUCTO DEPOSITO-CALDERIN	PIPE-COPPER DEPOSIT	1							
	Q881307000	ABRAZADERA 40*60	CLAMP 40*60	2							
10	3676900000	TUBO GOMA NEGRA Ø 17*10	BLACK RUBBER PIPE 17*10	1							
	Q881302000	ABRAZADERA 12*20	CLAMP 12-20	2							
11	Z602121000	MANGUERA ENTRADA DE AGUA	WATER INTAKE HOSE	1							
12	Z718910000	TUBO ENTRADA AGUA	WATER INTAKE PIPE	1							
	Q307048000	JUNTA TORICA 9.12x16.18x3.53	O-RING Ø9.12X16.18X3.53	4							
13	Z711904000	PASAMUROS ACLARADO	RINSE BUSHING	2							
	Q307032000	JUNTA 32x21x3	SEAL Ø 32X21X3	2							
	Q223023000	TUERCA EXAGONAL 5-8 LATON	HEX NUT 5-8 BRASS	2							
14	3676900000	TUBO GOMA NEGRA Ø 17*10	BLACK RUBBER PIPE 17*10	1							
	Q881302000	ABRAZADERA 12*20	CLAMP 12-20	4							
15	3704000000	TUBO GOMA NEGRA Ø10,5*5	BLACK RUBBER PIPE Ø10,5*5	1							
	Q881308000	ABRAZADERA 8-14L	CLAMP 8-14L	2							

MOD.	LAVAVAJILLAS DE CAPOTA PASS THROUGH DISHWASHER	ZONA / ZONE	PARTE FUNCIONAL ACLARADO RINSE FUNCTIONAL PART	PLANO DIAGRAM	C-2497a

ITEM	CODIGO CODE	DENOMINACION	NAME	AD-90 B BT							NOTAS
16	Z208915000	DOSIFICADOR DGTE ABRILLANT.	DETERGENT DISPENSER RINS.	1							
17	Z201101000	ESCUADRA AMARRE ELECTROVA	SOLENOID VALVE BRACKET	1							
	Q152024000	TORNILLO AVELLAN. M4x8 A304	HEXAGONAL COUNTERSUNK M4	2							
	Q242020000	ARANDELA ABANICO A.4 A304	FAN WASHER A4 A.304	2							
	Q012031000	TORNILLO EXAGONAL. M5x10 A304	HEXAGONAL BOLT M5X10 A.304	2							
	Q232030000	ARANDELA A5	WASHER A5	2							
18	Z701135000	E.V. SIMPLE 0V COD. 255.208	SOLENOID VALVE SIMP.220V CO	1							
	Z841107000	REGULAD. ENTRADA 10L 254.067	INPUT CONTROLLER 10L 254.067	1							
19	3676900000	TUBO GOMA NEGRA 17*10	BLACK RUBBER PIPE 17*10	1							
	Q881302000	ABRAZADERA 12*20	CLAMP 12-20	4							
20	Z718949000	TE TOMA PRESION	PRESSURE INTAKE T	1							
21	V817100000	CONDENSADOR 6 M,F,	CONDENSER 6 M,F,	1							
22	Z718931000	SOPORTE MOTOBOMBA CLINIC	CLINIC MOTOR PUMP SUPP.	1							
	Q152024000	TORNILLO AVELLAN. M4x8 A304	HEXAGONAL COUNTERSUNK M4	2							
23	3701700000	PERFIL GOMA NEGRO EN U 9*4	BLACK RUBBER PROFILE IN U 9	2							
24	Z401001000	BOMBA LAVADO	WASH PUMP	1							
	Z401001100	TURBINA BOMBA Z401001	TURBINE PUMP Z401001	1							
25	Z162301000	CONDUCTO ASPIRAC. IMPULSION	EXTRACTOR PIPE	1							
	Q881307000	ABRAZADERA 40*60	CLAMP 40*60	2							
26	Z258916000	CALDERIN COMPLETO BBT.	COMPLETE DRUM	1							
27	Z718935000	CONDUCTO IMPULSION CLINIC	DRIVE THROUGH CLINIC	1							
	Q881307000	ABRAZADERA 40*60	CLAMP 40*60	2							
28	Z701104000	REDUCCION	REDUCTION	1							
29	3676900000	TUBO GOMA NEGRA 17*10	BLACK RUBBER PIPE 17*10	2							
	Q881302000	ABRAZADERA 12*20	CLAMP 12-20	4							
30	Z710706000	PASAMUROS	BUSHING	1							
31	3676900000	TUBO GOMA NEGRA 17*10	BLACK RUBBER PIPE 17*10	1							
	Q881302000	ABRAZADERA 12*20	CLAMP 12-20	2							
32	Z718927000	TUBO PAS. ACLARADO CLINIC	CLINIC RINSE PIPE	1							
33	3676900000	TUBO GOMA NEGRA 17*10	BLACK RUBBER PIPE 17*10	1							
	Q881302000	ABRAZADERA 12*20	CLAMP 12-20	2							

MOD.	LAVAVAJILLAS DE CAPOTA PASS THROUGH DISHWASHER	ZONA / ZONE	PARTE FUNCIONAL ACLARADO RINSE FUNCTIONAL PART	PLANO DIAGRAM	C-2497a

ITEM	CODIGO CODE	DENOMINACION	NAME	AD-90 B BT							NOTAS
34	Z718951000	PASAMUROS ACLAR. CLINIC	CLINICRINSE BUSHING	1							
	Q223107000	TUERCA M.20x2.5	NUT M.20X2.5	1							
35	Z718928000	TUBO PASAM. CALDER. CLINIC	CLINIC RINSE PIPE	1							
	Q307048000	JUNTA TORICA 9.12x16.18x3.53	O-RING Ø9.12X16.18X3.53	1							
36	3676900000	TUBO GOMA NEGRA 17*10	BLACK RUBBER PIPE 17*10	1							
	Q881302000	ABRAZADERA 12*20	CLAMP 12-20	2							

N plano	Firma	Fecha	Aparato		Lamina
C-2498		2009-12	LAVAVAJILL. AD-90; DD; B A; B DD	CONJUNTO FUNCIONAL ELECTRICO	6

ITEM MARCADO EN COLOR = REPUESTO RECOMENDADO
COLOURED ITEM = RECOMMENDED SPARE PART

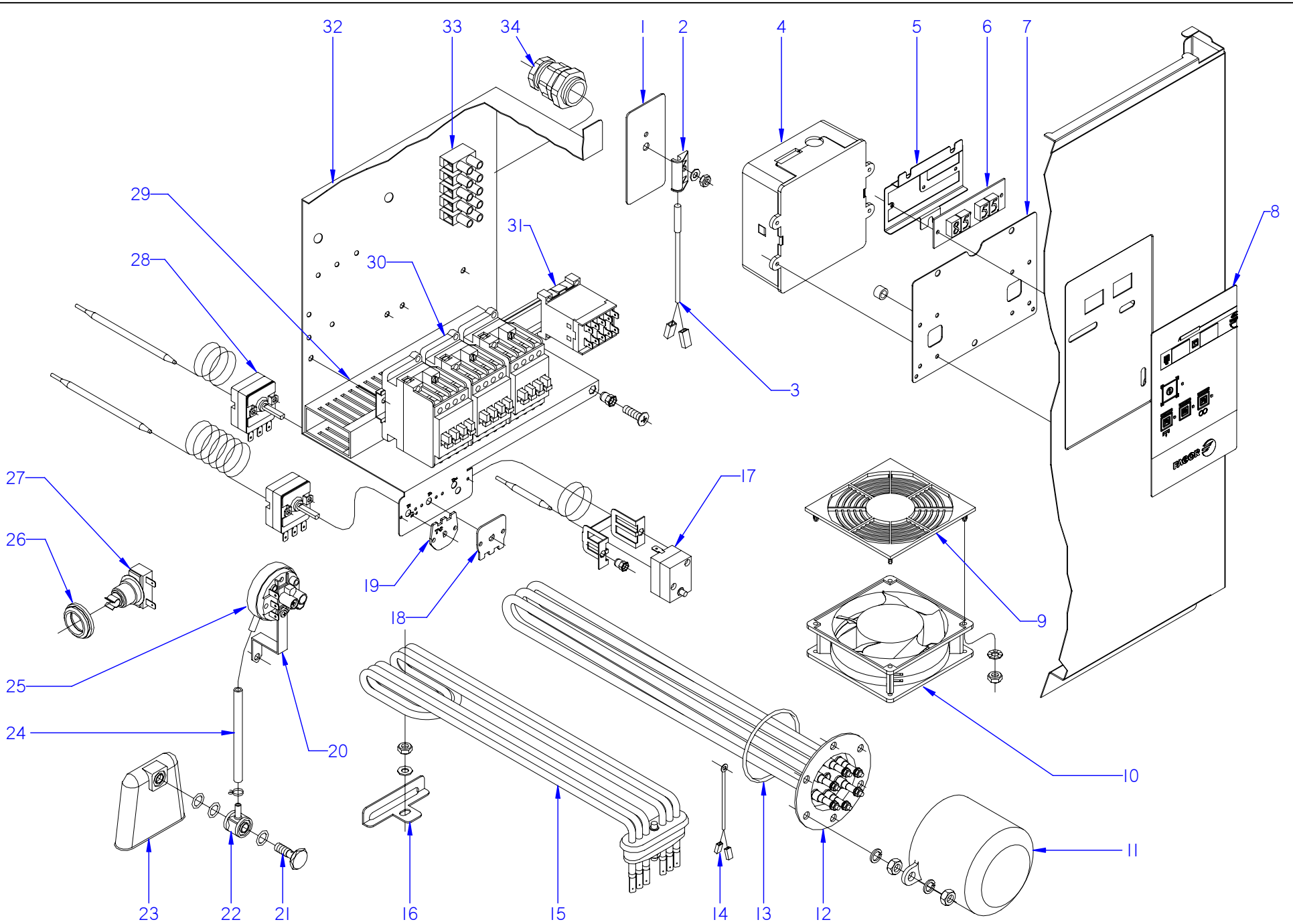

Fagor Industrial S.Coop.
Onate

MOD.	LAVAVAJILLAS DE CAPOTA PASS THROUGH DISHWASHER	ZONA	PARTE FUNCIONAL ELECTRICA ELECTRICS FUNCTIONAL PART	PLANO	C-2498

ITEM	CODIGO	DENOMINACION	TEXTO	AD-90	AD-90 DD	AD-90 B A	AD-90 B DD				NOTAS
1	Z101211000	APOYO INTERRUPTOR	SWITCH SUPPORT	1	1	1	1				
2	Z203010000	AMARRE INTERRUPTOR MAGNET.	MAGNETIC SWITCH FASTENER	1	1	1	1				
	Q232040000	ARANDELA A-6	WASHER A-6	1	1	1	1				
	Q162040000	TUERCA EXAGONAL M-6	HEXAGONAL NUT M-6	1	1	1	1				
3	Z203009000	INTERRUPTOR MAGNETICO	MAGNETIC SWITCH	1	1	1	1				
4	Z213069000	TARJETA 5 RELES	5 RELAY CARD	1	1	1	1				ELIMINADO 01.06.11
4	Z213073000	TARJETA 5 RELES	5 RELAY CARD	1	1	1	1				INTRODUCIDO 01.06.11
	Q232020000	ARANDELA A4	WASHER A4	4	4	4	4				
	Q242020000	ARANDELA ABANICO A5 A.304	FAN WASHER A5 A.304	4	4	4	4				
	Q042022000	TORN. AVELLANADO M4X15	HEXAGONAL COUNTERSUNK M4	4	4	4	4				
	Z515045000	CASQUILLO SEPARADOR B	SEPARATOR BUSHING B	4	4	4	4				
5	Z713023000	SOPORTE DISPLAY CAPOTA	HOOD DISPLAY SUPPORT	1	1	1	1				
	R663036000	FIJACION CIRCUITO	CIRCUIT ATTACHMENT	3	3	3	3				ELIMINADO 29.10.10
	T133007000	DISTANCIADOR M3	SPACER M3	3	3	3	3				INTRODUCIDO 29.10.10
6	Z713017000	DISPLAY GICAR TEMPERATURAS	GICAR TEMPERATURE DISPLAY	1	1	1	1				
7	Z713027000	SOPORTE PROGRAMADOR RELÉ	RELAY PROGRAMMER SUPPORT	1	1	1	1				
	Q162030000	TUERCA EXAGONAL M5	HEXAGONAL NUT M5	2	2	2	2				
	Q262030000	ARANDELA GROW. A5 A.304	WASHER GROW. A5 A.304	2	2	2	2				
8	Z742916000	EMBELLECEDOR ADHESIVO AD-90	ADHESIVE TRIM AD-90	1	1	_	_				
8	Z742920000	EMBELLECED. ADHESIVO AD-90 B	ADHESIVE TRIM AD-90 B	_	_	1	1				
	Q152004000	TORNILL, APLASTADO M5x13 A304	FLAT HEADED BOLT M5x13 A304	2	2	2	2				
9	Z713015000	PROTECCION VENTILADOR ABS	FAN PROTECTION ABS	1	1	1	1				
	Q042022000	TORNILLO AVELLANADO M4x15	COUNTERSUNK BOLT M4x15	8	8	8	8				
	Q162020000	TUERCA EXAGONAL M4	HEXAGONAL NUT M4	12	12	12	12				
	Q242020000	ARANDELA ABANICO A-4 A304	FAN WASHER A-4 A304	8	8	8	8				
10	Z103066000	VENTILADOR 230V,50/60 HZ	FAN 230V,50/60 HZ	1	1	1	1				
11	Z651731000	CAPERUZA RESISTEN. CALDERIN	DRUM RESIST. CAP	1	1	1	1				
	Q163140000	TUERCA EXAGONAL M6 LATON	HEXAGONAL NUT M6 BRASS	2	2	2	2				
	Q012031000	TORNIL. EXAGONAL M5x10 A.304	HEXAGONAL BOLT M5X10 A.304	2	2	2	2				
	Q232030000	ARANDELA A-5	WASHER A-5	2	2	2	2				

MOD.	LAVAVAJILLAS DE CAPOTA PASS THROUGH DISHWASHER	ZONA	PARTE FUNCIONAL ELECTRICA ELECTRICS FUNCTIONAL PART	PLANO	C-2498

ITEM	CODIGO	DENOMINACION	TEXTO	AD-90	AD-90 DD	AD-90 B A	AD-90 B DD				NOTAS
12	Z241701000	RESISTENCIA CALDERIN	DRUM RESISTOR	1	1	1	1				
	Q221305000	TUERCA EX, AUTO. M4 ZINCADA	HEX NUT , AUTO. M4 ZINC-COAT	6	6	6	6				
	Q163140000	TUERCA EXAGONAL M6 LATON	HEXAGONAL NUT M6 BRASS	6	6	6	6				
	Q262040000	ARANDELA GROW. A6 A,304	WASHER GROW. A6 A.304	6	6	6	6				
13	Q307035000	JUNTA TORICA AN-36 282333	O-RING AN-36 282333	1	1	1	1				
14	Z713028000	SONDAS TEMPERATURA GICAR	GICAR TEMPERATURE GAUGE	1	1	1	1				
15	Z743601000	RESISTENCIA TANQUE	TANK RESISTOR	1	1	1	1				
16	Z743602000	SOPORTE RESISTENCIA TANQUE	TANK RESISTOR SUPPORT	1	1	1	1				
	Q232040000	ARANDELA A,6	WASHER A,6	1	1	1	1				
	Q162040000	TUERCA EXAGONAL M6	HEXAGONAL NUT M6	1	1	1	1				
17	Z213014000	LIMITADOR TECASA P.	LIMITER TECASA P.	1	1	1	1				
S/Nº	Z203060000	AMARRE LIMITADOR TECASA	LIMITER FASTENING TECASA	1	1	1	1				
	Q221341000	REMACHE EXAGONAL M4	HEXAGONAL RIVET M4	2	2	2	2				
	Q152024000	TORNILLO AVELLANADO M4x8	COUNTERSUNK BOLT M4x8	2	2	2	2				
18	Z713038000	REGU. TERMOS. TANQUE 60 ºC	TANK THERMOSTAT CONTROL 6	1	1	1	1				
19	Z718446000	CHAPA W 85ºC	PLATE W 85ºC	1	1	1	1				
20	Z602923000	SOPORTE PRESOSTATO	PRESSURE SWITCH SUPPORT	1	1	1	1				
	Q082032000	TORNILLO ALOMADO BZ-3,5x9,5	CURVED SCREW BZ-3.5x9.5	1	1	1	1				
	Q162040000	TUERCA EXAGONAL M6	HEXAGONAL NUT M6	1	1	1	1				
	Q232040000	ARANDELA A6	WASHER A6	1	1	1	1				
21	Z203013000	TORNILLO PRESOSTATO	PRESSURE SWITCH BOLT	1	1	1	1				
22	Z203012000	EMPALME PRESOSTATO	PRESSURE SWITCH CONNEX	1	1	1	1				
	Q307003000	JUNTA TOR.16,01x10,77x2,62	O-RING 16.01x10.77x2.62	3	3	3	3				
23	Z203011000	CAMARA PRESOSTATO	PRESSURE SWITCH	1	1	1	1				
24	3702400000	TUBO DE GOMA 8x4 D8*4	RUBBER PIPE 8x4 D8*4	1	1	1	1				
	P102154000	BRIDA ELASTICA TUBO	ELASTIC PIPE FLANGE	2	2	2	2				
25	Z103077000	RACORD EN Y	Y-CONNECTION	_	_	1	1				
26	Z713098000	PRESOTATO SEGURIDAD	SAFETY PRESSOSTAT	_	_	1	1				
27	Z713002000	PRESOSTATO SIMPLE	SIMPLE PRESSURE SWITCH	1	1	1	1				
28	N503017000	SOPORTE TERMOSTATO 1001713	THERMOSTAT SUPPORT 100171	2	2	2	2				
S/Nº	P443060000	TAPON	COVER	1	1	1	1				

MOD.	LAVAVAJILLAS DE CAPOTA PASS THROUGH DISHWASHER	ZONA	PARTE FUNCIONAL ELECTRICA ELECTRICS FUNCTIONAL PART	PLANO	C-2498

ITEM	CODIGO	DENOMINACION	TEXTO	AD-90	AD-90 DD	AD-90 B A	AD-90 B DD				NOTAS
29	R213004000	TERMOSTATO REARME MANUAL	MANUAL RESET THERMOSTAT	1	1	1	1				
30	Z393005000	TERMOSTATO CALDERIN	WASH DRUM THERMOSTAT	2	2	2	2				ELIMINADO 29.10.10
30	Z203014000	TERMOSTATO CALDERIN	WASH DRUM THERMOSTAT	2	2	2	2				INTRODUCIDO 29.10.10
	Q152024000	TORNILLO AVELLANADO M4x8	COUNTERSUNK BOLT M4x8	2	2	2	2				
31	3715520000	CANALETA UNEX 60,30,77	PIPING UNEX 60.30.77	3	3	3	3				
	Q419005000	REMACHE 4x8 ALMG3 / ALUMINIO	RIVET 4X8 ALMG3 / ALUMINIUM	4	4	4	4				
	Q221342000	REMACHE EXAGONAL M5	HEXAGONAL RIVET M5	1	1	1	1				
	Q232040000	ARANDELA A6	WASHER A6	2	2	2	2				
	Q162040000	TUERCA EXAGONAL M6	HEXAGONAL NUT M6	2	2	2	2				
	Q152004000	TORNILL, APLASTADO M5x13 A304	FLAT HEADED BOLT M5x13 A304	1	1	1	1				
	Z713035000	REGLETA 6 mm.	STRIP 6 mm.	1	1	1	1				
	Z103064000	BASE UNEX 1252	BASE UNEX 1252	2	2	2	2				
S/Nº	Z403016000	GUIA CONTACTOR L-100	CONTACTOR GUIDE L-100	1	1	1	1				
	R663055000	GUIA CONTACTOR L-120	CONTACTOR GUIDE L-120	1	1	1	1				
35	Z743006000	REGLETA DE CONEXIONES	CONNECTION STRIP	1	1	_	1				ELIMINADO 03.09.10
35	Z683069000	BORNA 16	TERMINAL 16	3	3	_	3				INTRODUCIDO 03.09.10
	Z683097000	BORNA PASO WDU16 10204,8	STEP TERMINAL WDU16 10204.8	1	1	_	1				INTRODUCIDO 03.09.10
	Z683070000	BORNA A TIERRA WEIDMULLER	TERMINAL TO EARTH WEIDMULL	1	1	_	1				INTRODUCIDO 03.09.10
	R073005000	BORNAS PORTA FUSIBLES	FUSE HOLDER TERMINALS FUS	2	2	_	2				INTRODUCIDO 03.09.10
35	Z683069000	BORNA 16	TERMINAL 16	_	_	3	_				
	Z683097000	BORNA PASO WDU16 10204,8	STEP TERMINAL WDU16 10204.8	_	_	1	_				
	Z683070000	BORNA A TIERRA WEIDMULLER	TERMINAL TO EARTH WEIDMULL	_	_	1	_				
	Z683068000	SEÑALIZ.DEK-6WEIDMULLER	SIGNS DEK-6WEIDMULLER	_	_	1	_				
	Z683096000	TOPE FINAL WEW35 10590.0	END STOP WEW35 10590.0	_	_	1	_				
	Z103083000	GUIA CONTACTOR L-73	CONTACTOR GUIDE L-73	_	_	1	_				
	Q162030000	TUERCA EXAGONAL M5	HEXAGONAL NUT M5	_	_	2	_				
36	R023013000	PRENSA ESTOPAS	STUFFING BOX	1	1	1	1				

N plano	Firma	Fecha	Aparato		Lamina
C-2498a		2011-06	LAVAVAJILLAS AD-90 B BT	CONJUNTO FUNCIONAL ELECTRICO	6a

Fagor Industrial S.Coop. Onate

FAGOR

ITEM MARCADO EN COLOR = REPUESTO RECOMENDADO
COLOURED ITEM = RECOMMENDED SPARE PART

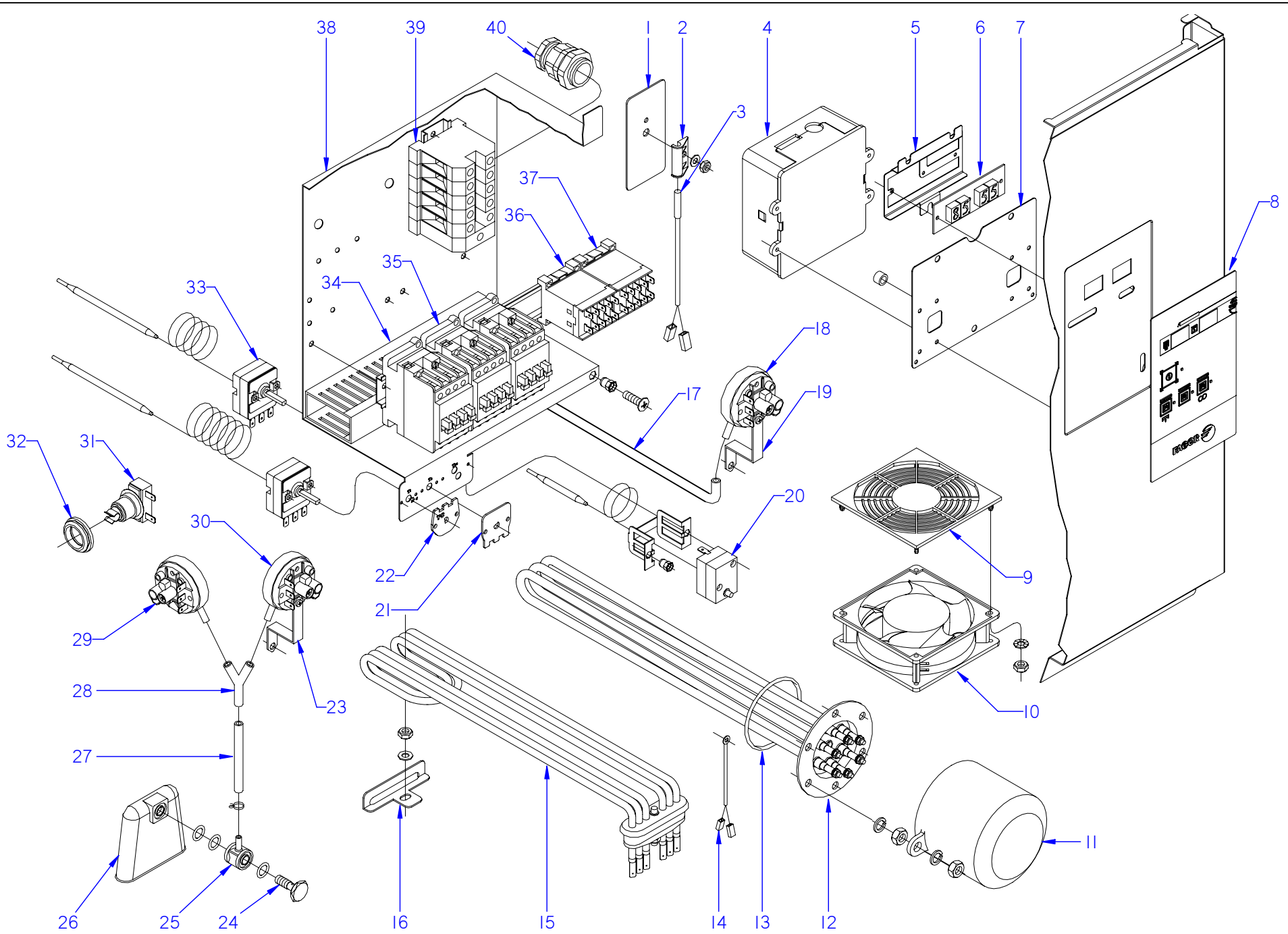

MOD.	LAVAVAJILLAS DE CAPOTA PASS THROUGH DISHWASHER	ZONA / ZONE	PARTE FUNCIONAL ELECTRICA ELECTRICS FUNCTIONAL PART	PLANO DIAGRAM	C-2498a

ITEM	CODIGO CODE	DENOMINACION	NAME	AD-90 B BT							NOTAS
1	Z101211000	APOYO INTERRUPTOR	SWITCH SUPPORT	1							
2	Z203010000	AMARRE INTERRUPTOR MAGNET.	MAGNETIC SWITCH FASTENER	1							
	Q232040000	ARANDELA A-6	WASHER A-6	1							
	Q162040000	TUERCA EXAGONAL M-6	HEXAGONAL NUT M-6	1							
3	Z203009000	INTERRUPTOR MAGNETICO	MAGNETIC SWITCH	1							
4	Z213073000	TARJETA 5 RELES	5 RELAY CARD	1							
	Q232020000	ARANDELA A4	WASHER A4	4							
	Q242020000	ARANDELA ABANICO A5 A.304	FAN WASHER A5 A.304	4							
	Q042022000	TORN. AVELLANADO M4X15	HEXAGONAL COUNTERSUNK M4	4							
	Z515045000	CASQUILLO SEPARADOR B	SEPARATOR BUSHING B	4							
5	Z713023000	SOPORTE DISPLAY CAPOTA	HOOD DISPLAY SUPPORT	1							
6	Z713017000	DISPLAY GICAR TEMPERATURAS	GICAR TEMPERATURE DISPLAY	1							
7	Z713027000	SOPORTE PROGRAMADOR RELÉ	RELAY PROGRAMMER SUPPORT	1							
8	Z742920000	EMBELLEC. ADHESIVO AD-90 B	ADHESIVE TRIM AD-90 B	1							
9	Z713015000	PROTECCION VENTILADOR ABS	FAN PROTECTION ABS	1							
	Q042022000	TORNILLO AVELLANADO M4x15	COUNTERSUNK BOLT M4x15	8							
	Q162020000	TUERCA EXAGONAL M4	HEXAGONAL NUT M4	12							
	Q242020000	ARANDELA ABANICO A-4 A304	FAN WASHER A-4 A304	8							
10	Z103066000	VENTILADOR 230V,50/60 HZ	FAN 230V,50/60 HZ	1							
11	Z651731000	CAPERUZA RESISTEN. CALDERIN	DRUM RESIST. CAP	1							
	Q163140000	TUERCA EXAGONAL M6 LATON	HEXAGONAL NUT M6 BRASS	2							
	Q012031000	TORNIL. EXAGONAL M5x10 A.304	HEXAGONAL BOLT M5X10 A.304	2							
	Q232030000	ARANDELA A-5	WASHER A-5	2							
12	Z241701000	RESISTENCIA CALDERIN	DRUM RESISTOR	1							
	Q221305000	TUERCA EX, AUTO. M4 ZINCADA	HEX NUT , AUTO. M4 ZINC-COAT	6							
	Q163140000	TUERCA EXAGONAL M6 LATON	HEXAGONAL NUT M6 BRASS	6							
	Q262040000	ARANDELA GROW. A6 A,304	WASHER GROW. A6 A.304	6							
13	Q307035000	JUNTA TORICA AN-36 282333	O-RING AN-36 282333	1							
14	Z713028000	SONDAS TEMPERATURA GICAR	GICAR TEMPERATURE GAUGE	2							
15	Z743601000	RESISTENCIA TANQUE	TANK RESISTOR	1							

MOD.	LAVAVAJILLAS DE CAPOTA PASS THROUGH DISHWASHER	ZONA / ZONE	PARTE FUNCIONAL ELECTRICA ELECTRICS FUNCTIONAL PART	PLANO DIAGRAM	C-2498a

ITEM	CODIGO CODE	DENOMINACION	NAME	AD-90 B BT							NOTAS
16	Z743602000	SOPORTE RESISTENCIA TANQUE	TANK RESISTOR SUPPORT	1							
	Q232040000	ARANDELA A,6	WASHER A,6	1							
	Q162040000	TUERCA EXAGONAL M6	HEXAGONAL NUT M6	1							
17	3702400000	TUBO DE GOMA 8x4 D8*4	RUBBER PIPE 8x4 D8*4	1							
	P102154000	BRIDA ELASTICA TUBO	ELASTIC PIPE FLANGE	2							
18	Z213059000	TRIPLE PRESOTATO 40-120-150	TRIPLE PRESSOST. 4 0-120-150	1							
19	Z602923000	SOPORTE PRESOSTATO	PRESSURE SWITCH SUPPORT	1							
	Q082032000	TORNILLO ALOMADO BZ-3,5x9,5	CURVED SCREW BZ-3.5x9.5	1							
	Q162040000	TUERCA EXAGONAL M6	HEXAGONAL NUT M6	1							
	Q232040000	ARANDELA A6	WASHER A6	1							
20	Z213014000	LIMITADOR TECASA P.	LIMITER TECASA P.	1							
S/Nº	Z203060000	AMARRE LIMITADOR TECASA	LIMITER FASTENING TECASA	1							
	Q221341000	REMACHE EXAGONAL M4	HEXAGONAL RIVET M4	2							
	Q152024000	TORNILLO AVELLANADO M4x8	COUNTERSUNK BOLT M4x8	2							
21	Z713038000	REGU. TERMOS. TANQUE 60 ºC	TANK THERMOSTAT CONTROL 6	1							
22	Z718446000	CHAPA W 85ºC	PLATE W 85ºC	1							
23	Z602923000	SOPORTE PRESOSTATO	PRESSURE SWITCH SUPPORT	1							
	Q082032000	TORNILLO ALOMADO BZ-3,5x9,5	CURVED SCREW BZ-3.5x9.5	1							
	Q162040000	TUERCA EXAGONAL M6	HEXAGONAL NUT M6	1							
	Q232040000	ARANDELA A6	WASHER A6	1							
24	Z203013000	TORNILLO PRESOSTATO	PRESSURE SWITCH BOLT	1							
25	Z203012000	EMPALME PRESOSTATO	PRESSURE SWITCH CONNEX	1							
	Q307003000	JUNTA TOR.16,01x10,77x2,62	O-RING 16.01x10.77x2.62	3							
26	Z203011000	CAMARA PRESOSTATO	PRESSURE SWITCH	1							
27	3702400000	TUBO DE GOMA 8x4 D8*4	RUBBER PIPE 8x4 D8*4	1							
	P102154000	BRIDA ELASTICA TUBO	ELASTIC PIPE FLANGE	2							
28	Z103077000	RACORD EN Y	Y-CONNECTION	1							
29	Z713098000	PRESOTATO SEGURIDAD	SAFETY PRESSOSTAT	1							
30	Z713002000	PRESOSTATO SIMPLE	SIMPLE PRESSURE SWITCH	1							
31	R213004000	TERMOSTATO REARME MANUAL	MANUAL RESET THERMOSTAT	1							

MOD.	LAVAVAJILLAS DE CAPOTA PASS THROUGH DISHWASHER	ZONA / ZONE	PARTE FUNCIONAL ELECTRICA ELECTRICS FUNCTIONAL PART	PLANO DIAGRAM	C-2498a

ITEM	CODIGO CODE	DENOMINACION	NAME	AD-90 B BT							NOTAS
32	N503017000	SOPORTE TERMOSTATO 1001713	THERMOSTAT SUPPORT 100171	2							
S/Nº	P443060000	TAPON	COVER	1							
33	Z203014000	TERMOSTATO CALDERIN	WASH DRUM THERMOSTAT	2							
	Q152024000	TORNILLO AVELLANADO M4x8	COUNTERSUNK BOLT M4x8	2							
34	3715520000	CANALETA UNEX 60,30,77	PIPING UNEX 60.30.77	3							
	Q419005000	REMACHE 4x8 ALMG3 / ALUMINIO	RIVET 4X8 ALMG3 / ALUMINIUM	4							
	Q221342000	REMACHE EXAGONAL M5	HEXAGONAL RIVET M5	1							
	Q232040000	ARANDELA A6	WASHER A6	2							
	Q162040000	TUERCA EXAGONAL M6	HEXAGONAL NUT M6	2							
	Q152004000	TORNILL, APLASTADO M5x13 A304	FLAT HEADED BOLT M5x13 A304	1							
	Z713035000	REGLETA 6 mm.	STRIP 6 mm.	1							
	Z103064000	BASE UNEX 1252	BASE UNEX 1252	2							
S/Nº	Z403016000	GUIA CONTACTOR L-100	CONTACTOR GUIDE L-100	1							
	R663055000	GUIA CONTACTOR L-120	CONTACTOR GUIDE L-120	1							
35	Z203050000	CONTAC. SIRIUS 3R 230V.50-60	CONTACT. SIRIUS 3R 230V.50-60	3							
36	Z213007000	CONTACTOR 230 V. 50-60 HZ	CONTACTOR 230 V. 50-60 HZ	1							
37	Z203062000	RELE 230V. 16A-60 HZ	RELAY 230V. 16A-60 HZ	1							
	Z103083000	GUIA CONTACTOR L-73	CONTACTOR GUIDE L-73	1							
38	Z713037000	CAJA CUADRO ELECTRICO	SWITCHBOARD BOX	1							
39	Z683069000	BORNA 16	TERMINAL 16	3							
	Z683097000	BORNA PASO WDU16 10204,8	STEP TERMINAL WDU16 10204.8	1							
	Z683070000	BORNA A TIERRA WEIDMULLER	TERMINAL TO EARTH WEIDMULL	1							
	Z683068000	SEÑALIZ.DEK-6WEIDMULLER	SIGNS DEK-6WEIDMULLER	1							
	R073005000	BORNAS PORTA FUSIBLES	FUSE HOLDER TERMINALS	2							
	R723015000	FUSIBLE CRISTAL 10A.	FUSE HOLDER TERMINALS	2							
	Z103083000	GUIA CONTACTOR L-73	CONTACTOR GUIDE L-73	1							
40	R023013000	PRENSA ESTOPAS	STUFFING BOX	1							

MOD.	LAVAVAJILLAS DE CAPOTA PASS THROUGH DISHWASHER	ZONA	VARIOS / MISCELLANEOUS	PLANO	

ITEM	CODIGO	DENOMINACION	TEXTO	AD-90	AD-90 DD	AD-90 B A	AD-90 B BT	AD-90 B DD			
	Z716135000	FOLLETO DE INSTRUCCIONES AD	INSTRUCTION LEAFLET	1	1	1	1	1			
	Z713026000	ESQUEMA TEORICO AD	THEORETICAL DIAGRAM AD.	1	1	1	1	1			PLANO HC-18188
	Z713025000	PLANO DE MONTAJE AD	ASSEMBLY PLAN AD	1	1	1	1	1			PLANO HC-18187
	Z713036000	LEYENDA CAPOTA	HOOD LEGEND	1	1	1	1	1			PLANO HC-17400
	Z723012000	CABLEADO CALDERIN AD-120	DRUM AD-120 WIRING	1	1	1	1	1			
	Z713019000	CABLEADO PROLONGAD. SONDAS	PROBE WIRING	1	1	1	1	1			ELIMINADO 01.11.10
	Z713021000	CABLE CONEXIÓN PLACA-DISPLAY	DISPLAY CONNECTI. WIRING	1	1	1	_	1			
	Z713040000	CABLEADO PROLONG. EMB.MEMB.	PROBE WIRING	1	1	1	1	1			ELIMINADO 11.02.11
	Z713024000	INSTALACCION ELECTRICA AD	ELEC. INSTALATION AD	1	1	1	1	1			
	Z718946000	CABLEADO TRIFASICO 10 MM.	III+N WIRING	_	1	_	_	1			
	Z208904000	CABLEADO DOSIFICADOR DTGTE	DOSEFOR DETERGEN. WIRING	_	1	_		1			
	Z723013000	CABLE TENSOR	TENSIONER WIRING	1	1	1	1	1			INTRODUCIDO 15.11.10

AD 120, AD 120 B, AD 120 B BT, AD 120 C, AD 120 HY, AD 120 W,
AD 100, AD 100 B, AD 100 B BT, AD 100 C, AD 100 HY, AD 100 W,
AD 90, AD 90 B, AD 90 B BT, AD 90 C, AD 90 HY, AD 90 W,

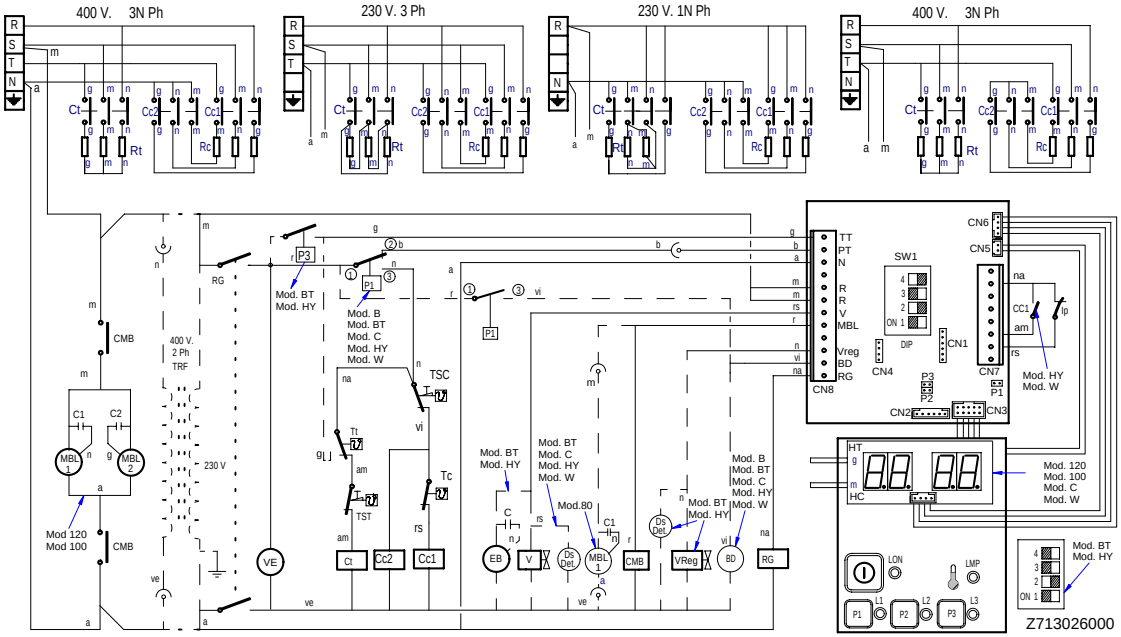

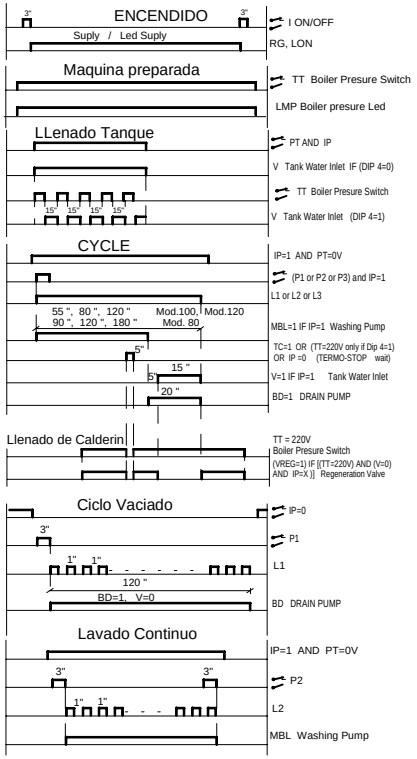

FAGOR ELECTRONICO MODELO ADVANCE	DIP1	DIP2	DIP3	DIP4	TIEMPOS CICLOS (sg.)
AD-90 , AD-90 DD, AD-90 B BT	ON	OFF	OFF	OFF	P1=75 / P2= 120 / P3=180
AD-90 W	ON	OFF	OFF	ON	
AD-120, AD-120 B, AD-120 B BT, ADE-120, ADE-120 B.	ON	OFF	ON	OFF	P1=55 / P2= 80 / P3=120 - ∞
AD-120 W, AD-120 HY , AD- 120 C	ON	OFF	ON	ON	

DIP1 = ON, al cerrar la puerta o bajar capó el lavavajillas se pone en marcha.
DIP1= OFF, al cerrar la puerta o bajar el capo el lavavajillas sigue lavando **SÓLO SI EL CICLO NO HA ACABADO.**

DIP2 = ON, Para los modelos que llevan **DESCALCIFICADOR,** versiones **"D".**
DIP2 = OFF, para los modelos con **BOMBA DESAGÜE**, versiones **"B".**

DIP1 + DIP3 , con las diferentes combinaciones posibles configuramos los tiempos de ciclo.

DIP4 = ON, TERMOSTOP ACTIVADO, para los modelos con termo stop, versiones **"C", "W"** y **"HY".**
DIP4 = OFF, TERMOSTOP DESACTIVADO, para los modelos que **NO** llevan **TERMOSTOP.**

-	Esquema teorico AD 120	-	-	Z713026000	-
Zk./Nº	Pieza	Cant.	Materiala/Material	Klas. zk/Nº Clas.	Gainazal akabera/Tratamiento
Zk./Nº	Aldaketa/Modificaciones		Nork proposatua/Propuesta de	Data/Fecha	Perdoi orokorrak Tolerancias generales
-	-		-	-	
-	-		-	-	< 5 ± 0.2 / 50 ÷ 100 ± 0.8
-	-		-	-	5 ÷ 25 ± 0.4 / >100± 1
-	-		-	-	25 ÷ 50 ± 0.6 / α ± 1
-	-		-	-	

	Sinadura/Firma	Data/Fecha
Marraztua/Dibujado	M.Maillo	30-05-2009
Proiektatua/Proyectado	M.Maillo	30-05-2009
Egiaztatua/Comprobado	Z.Altube	30-05-2009

FAGOR
Fagor Industrial,Koop.Elk, Mugatua

Gainazal perdoia Mecanizado superficial
–

Eskala/Escala
-

LAVAVAJILLAS

Plano Zk./Plano Nº
HC - 18188

Zk. ord. du -
Zk.gaitik ord. -

Plano hau ezin daiteke erabili, ez berriztatu, gure baimenik gabe.

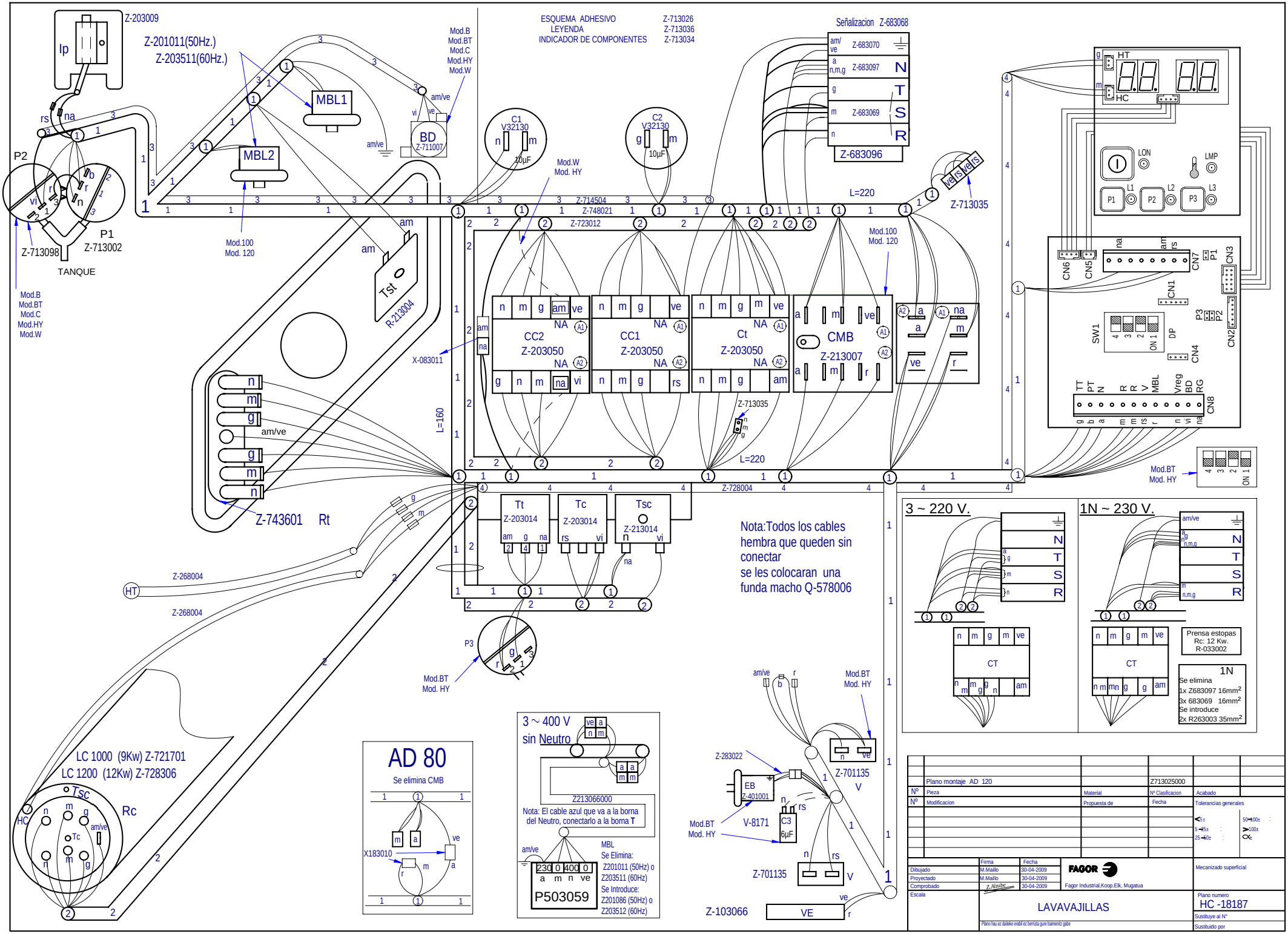

ESQUEMA ADHESIVO Z-713026
LEYENDA Z-713036
INDICADOR DE COMPONENTES Z-713034
Señalizacion Z-683068
Z-683070
Z-683097
Z-683069
Z-683096
Z-203009
Z-201011(50Hz.)
Z-203511(60Hz.)
MBL1
MBL2
BD
Z-711007
C1
V32130
C2
V32130
10µF
Mod.B
Mod.BT
Mod.C
Mod.HY
Mod.W
Mod.100
Mod. 120
P2
P1
Z-713098
Z-713002
TANQUE
Z-714504
Z-748021
Z-723012
L=220
Z-713035
Tst
R-213004
X-083011
CC2
Z-203050
CC1
Z-203050
Ct
Z-203050
CMB
Z-213007
L=160
Z-743601 Rt
Z-728004
Tt
Z-203014
Tc
Z-203014
Tsc
Z-213014
Z-268004
HT
P3
Nota:Todos los cables
hembra que queden sin
conectar
se les colocaran una
funda macho Q-578006
3 ~ 220 V.
1N ~ 230 V.
CT
Prensa estopas
Rc: 12 Kw.
R-033002
1N
Se elimina
1x Z683097 16mm²
3x 683069 16mm²
Se introduce
2x R263003 35mm²
LC 1000 (9Kw) Z-721701
LC 1200 (12Kw) Z-728306
Tsc
Rc
AD 80
Se elimina CMB
X183010
3 ~ 400 V
sin Neutro
Z213066000
Nota: El cable azul que va a la borna
del Neutro, conectarlo a la borna T
MBL
Se Elimina:
Z201011 (50Hz) o
Z203511 (60Hz)
Se Introduce:
Z201086 (50Hz) o
Z203512 (60Hz)
P503059
Z-283022
EB
Z-401001
V-8171
C3
6µF
Z-701135
Z-103066
VE
Plano montaje AD 120
Z713025000
Nº Pieza
Nº Modificacion
Material
Propuesta de
Nº Clasificacion
Fecha
Acabado
Tolerancias generales
Dibujado M.Maillo 30-04-2009
Proyectado M.Maillo 30-04-2009
Comprobado 30-04-2009
Escala
Firma
Fecha
FAGOR
Fagor Industrial,Koop.Elk, Mugatua
Mecanizado superficial
LAVAVAJILLAS
Plano numero
HC -18187
Sustituye al Nº
Sustituido por

LEYENDA CAPOTA

	ESPAÑOL	FRANÇAIS	ENGLISH	DEUTSCH	ITALIANO
ⒶⒷⓒ	Puntos de conexion con R	Points de conexion R	Conecction point with R	Anschlußpunkte mit R	Punti di collegamento con R
BD	Bomba desagüe	Pompe de vidange	Drain pump	Abflußpumpe	Pompa scarico
C 1/2/3	Condensador	Condensateur	Condenser	Kondensator	Condensatore
CMB	Contactor bomba lavado	Contacteur pompe lavage	Wash pump contactor	Kontaktschütz Waschpumpe	Contattore pompa lavaggio
Cc 1/2	Contactor calentamiento calderin	Contacteur chauf. surchauffeur	Boiler heating contactor	Kontaktschütz Boilerheizung	Contattore riscaldamento boiler
Ct	Contactor calentamiento tanque	Contacteur chaufage cuve	Tank heating contactor	Kontaktschütz Heizung Tank	Contattore riscaldamento serbatoio
CP	Rele puerta	Relais porte	Door relay	Türrelais	Rele porta
Ds.Det.	Dosificador detergente	Dosseur de detergent	Detergent doser	Dosierer Spülmittel	Dosatore detersivo
E.B	Electrobomba de presion	Electropompe de pression	Electric pressure pump	Elektro-Drucksteigungspumpe	Electropompa pressione
IG	Interruptor general	Interrupteur general	Main switch	Hauptschalter	Interruttore generale
IP	Micro puerta	Micro porte	Door microswitch	Mikroschalter Tür	Micro porta
L1	Piloto de encendido	Voyant funcionement	Operation light	Betriebsanzeigelampe	Spia accensione
L2	Piloto marcha	Voyant demarrage	Start light	Startanzeigelampe	Spia avvio
L3	Piloto maquina preparada	Voyant machine prêt	Light machine ready	Betriebsbereitschaftsanzeigelampe	Pilota macchina preparata
MBL 1/2	Bomba lavado	Pompe lavage	Wash pump	Waschpumpe	Pompa lavaggio
M	Motor programador	Moteur du programmateur	Motor programmer	Motor Programmiervorrichtung	Motore programmatore
M Av. R	Motor program. avance rapido	Moteur du progr.avance rapide	Motor program. rapid advance	Motor Programmiervorrich. schneller Vorlauf	Motore programmatore avanzamento rapido
M1	Micro programador marcha	Micro du programm. de marche	Micro programmer on	Motor Programmiervorrich. Betrieb	Micro programma. di funzionamento
M2	Micro programador lavado	Micro du programm. de lavage	Micro programmer wash	Motor Programmiervorrich. Waschen	Micro programmatore di lavaggio
M3	Micro programador aclarado	Micro du programm. de rinçage	Micro programmer on	Motor Programmiervorrich. Spülen	Micro programmatore di risciacquo
M4	Micro programador Termo-stop	Micro du programm. Termo-stop	Micro programmer Termo-stop	Motor Programmiervorrich. Thermo-Stop	Micro programmatore Termo-stop
M5	Micro programador avance	Micro du programm. avance	Micro programmer advance	Motor Programmiervorrich. Vorlauf	Micro programmatore avanzamento
M6	Micro programador avance	Micro du programm. avance	Micro programmer advance	Motor Programmiervorrich. Vorlauf	Micro programmatore avanzamento
P, P1, P5	Presostato	Pressostat	Pressure switch	Druckwächter	Pressostato
P2, P3, P4	Presostato limitador	Pressostat de securité	Hi-limit pressure switch	Begrenzer Druckwächter	Pressostato limitatore
R	Rele de Generador de A.C.	Relais du Generateur	Generator rele	Relais Generator	Rele Generatore
ⓇⓃ	Toma de alimentac. Generador A.C.	Alimentation generateur	Water heater feeding	Stromversorgungsanschluß Gener.	Alimentazione generatore
RC	Resistencia calderin	Resistance surchauffeur	Boiler heating element	Heizwiderstand Boiler	Resistenza boiler
RT	Resistencia tanque	Resistance cuve	Tank heater	Heizwiderstand Tank	Resistenza serbatoio
Tt	Termostato tanque	Thermostat de cuve	Tank thermostat	Thermostat Tank	Termostato serbatoio
TC	Termostato calderin	Thermostat surchauffeur	Boiler thermostat	Thermostat kessel	Termostato boiler
Tst	Limitador tanque	Limitateur de cuve	Tank limiter	Begrenzer Tank	Limitatore serbatoio
TSC	Limitador calderin	Limiteur surchauffeur	Boiler Hi-limit	Begrenzer Boiler	Limitatore boiler
TSTP	Termostato termo-stop	Thermostat Termo-stop	Termo-stop Thermostat	Thermostat Termo-stop	Termostato Termo-stop
V	Electrovalvula llenado y aclarado	Electrovan. remplissage rinçage	Fill and rinse valve	Elektroventil Füllen und Spülen	Elettroval. riempimento e risciacquo
VE	Ventilador cuadro electrico	Ventilateur tableau electrique	Switchboard fan	Schalttafelventilator	Ventilatore quadro elettrico
COLOR	COLORES	COULEURS	COLOUR	FARBEN	COLORE
a =	Azul	Bleu	Blue	Blau	Blu
am =	Amarillo	Jaune	Yellow	Gelb	Giallo
am/ve =	Amarillo/verde	Jaune / vert	Yellow / green	Gelb/grün	Giallo/verde
b =	Blanco	Blanc	White	Weiß	Bianco
g =	Gris	Gris	Grey	Grau	Grigio
m =	Marrón	Marron	Brown	Braun	Marrone
n =	Negro	Noir	Black	Schwarz	Nero
na =	Naranja	Orange	Orange	Orange	Arancio
r =	Rojo	Rouge	Red	Rot	Rosso
rs =	Rosa	Rose	Pink	Rosa	Roseo
ve =	Verde	Vert	Green	Grün	Verde
vi =	Violeta	Violet	Purple	Violett	Viola

Z-713036